Alfa Laval T10

Gasketed plate heat exchanger for a wide range of applications

Introduction

Alfa Laval Industrial line is a wide product range that is used in virtually all types of industry.

Designed for high throughput, this model delivers excellent thermal performance. A large selection of plate and gasket types is available.

Applications

- Biotech and Pharmaceutical
- Chemicals
- Energy and Utilities
- Food, Dairy and Beverages
- Home and Personal care
- HVAC and Refrigeration
- Machinery and Manufacturing
- Marine and Transportation
- Mining, Minerals and Pigments
- Pulp and Paper
- Semiconductor and Electronics
- Steel
- Water and Waste treatment

Benefits

- High energy efficiency – low operating cost
- Flexible configuration – heat transfer area can be modified
- Easy to install – compact design
- High serviceability – easy to open for inspection and cleaning and easy to clean by CIP
- Access to Alfa Laval's global service network

Features

Every detail is carefully designed to ensure optimal performance, maximum uptime and easy maintenance. Selection of available features, depending on configuration some features may not be applicable:

- CurveFlow™ distribution area
- ClipGrip™ gasket attachment
- Offset gasket groove
- OmegaPort™ noncircular port holes
- Leak chamber
- SteerLock™ plate alignment
- FlexFlow™ plate design

- Compact frame
- Fixed bolt head
- Key hole bolt opening
- Lifting lug
- Lining
- Lock washer
- Tightening bolt cover

Alfa Laval 360° Service Portfolio

Our extensive service offering ensure top performance from your Alfa Laval equipment throughout its life cycle. The Alfa Laval 360 Service Portfolio include installation services, cleaning and repair as well as spare parts, technical documentation and trouble shooting. We also offer replacement, retrofit, integrity testing, monitoring and much more.

For information about our complete service offering and how to contact us - please visit www.alfalaval.com/service.

General remarks for technical information

- The global offering presented in this leaflet may not be available for all regions
- All combinations may not be configurable

Dimensional drawing

Measurements mm (inches)

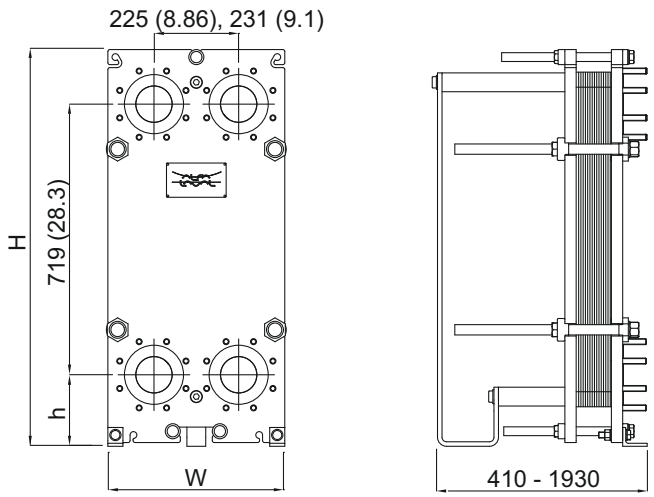

Frame type	H	W	h
ZM ALS, PED	957 (37.7”)	420 (16.5”)	128 (5.04”)
FM ALS, PED	1054 (41.5”)	470 (18.5”)	190 (7.48”)
FG ALS, PED, Marine[1]	1054 (41.5”)	470 (18.5”)	190 (7.48”)
FG ASME	1054 (41.5”)	470 (18.5”)	190 (7.48”)
FD ALS, PED	1054 (41.5”)	470 (18.5”)	190 (7.48”)
FD ASME	1054 (41.5”)	470 (18.5”)	190 (7.48”)

[1] Marine includes the PV-codes: ABS, BV, CCS, ClassNK, DNV, KR, LR, RINA, and RMRS.

The number of tightening bolts may vary depending on pressure rating.

For ZM frame is the support column replaced by a support foot.

Technical data

Plates	Type	Free channel, mm (inches)
B	Single plate	2.52 (0.099)
M	Single plate	3.95 (0.155)
BDc	Double wall plate	2.6 (0.10)

Materials	
Heat transfer plates	304, 316/316L, C–276, D–205, C–2000, Ni, TiPd Ti
Field gaskets	NBR, EPDM, FKM, HNBR, HeatSeal
Flange connections	Metal lined: stainless steel, Alloy 254, titanium, Alloy C276, Nickel 200/201, TiPd11
Frame and pressure plate	Carbon steel, epoxy painted

Other materials may be available on request

Operational data

Frame type	Max. design pressure (barg/psig)	Max. design temperature (°C/°F)
FM, pvcALS	10.0/145	180/356
FM, PED	10.0/145	180/356
FG, pvcALS	15.0/218	150/302
FG, ASME	10.4/151	250/482
FG, PED	15.0/218	150/302
FG, Marine [1]	15.0/218	200/392
FD, pvcALS	25.0/362	200/392
FD, ASME	21.0/304	250/482
FD, PED	25.0/362	200/392
ZM, pvcALS	10.0/145	100/212

[1] Marine standard includes the standards: ABS, BV, CCS, ClassNK, DNV, KR, LR, RINA, and RMRS.

Extended pressure and temperature rating may be available on request.

Flange connections

Frame type	Connection standard
FM, pvcALS	EN 1092-1 DN100 PN10 ASME B16.5 Class 150 NPS 4 JIS B2220 10K 100A
FM, PED	EN 1092-1 DN100 PN10 ASME B16.5 Class 150 NPS 4
FG, pvcALS	EN 1092-1 DN100 PN16 ASME B16.5 Class 150 NPS 4 JIS B2220 10K 100A JIS B2220 16K 100A
FG, Marine [1]	EN 1092-1 DN100 PN16 ASME B16.5 Class 150 NPS 4 JIS B2220 10K 100A JIS B2220 16K 100A
FG, ASME	ASME B16.5 Class 150 NPS 4
FG, PED	EN 1092-1 DN100 PN16 ASME B16.5 Class 150 NPS 4
FD, pvcALS	EN 1092-1 DN100 PN25 ASME B16.5 Class 150 NPS 4 JIS B2220 16K 100A JIS B2220 20K 100A
FD, ASME	ASME B16.5 Class 150 NPS 4 ASME B16.5 Class 300 NPS 4 (Rectangular Loose Flange)
FD, PED	EN 1092-1 DN100 PN25 ASME B16.5 Class 150 NPS 4
ZM, pvcALS	EN 1092-1 DN100 PN10

[1] Marine includes the standards: ABS, BV, CCS, DNV, ClassNK, KR, LR, RINA, and RMRS.

Standard EN1092-1 corresponds to GOST 12815-80 and GB/T 9115.

Authorized Distributor

This document and its contents are subject to copyrights and other intellectual property rights owned by Alfa Laval Corporate AB. No part of this document may be copied, re-produced or transmitted in any form or by any means, or for any purpose, without Alfa Laval Corporate AB’s prior express written permission. Information and services provided in this document are made as a benefit and service to the user, and no representations or warranties are made about the accuracy or suitability of this information and these services for any purpose. All rights are reserved.

© Alfa Laval Corporate AB

How to contact Alfa Laval

Up-to-date Alfa Laval contact details for all countries are always available on our website at www.alfalaval.com