Alfa Laval i-CP2000

Centrifugal Pumps

Introduction

The Alfa Laval i-CP2000 Centrifugal Pump is an economical pump for use in hygienic applications and delivers greater energy efficiency than similar pumps.

With its hygienic design, gentle product treatment, cost-effective operation and quick, easy maintenance, the i-CP2000 offers excellent value for money.

Applications

Designed for Cleaning-in-Place (CIP), the Alfa Laval i-CP2000 is ideal for hygienic applications within the dairy, food, beverage and personal care industries that require gentle product treatment and reliable operation.

The i-CP2000 pump is available in 6 sizes to handle capacities up to 140 m^3/hour and differential pressures up to 8 bar at 50 Hz.

Benefits

- Delivers greater energy efficiency than other pumps with similar specification level.
- Designed according to international hygienic design standards and with verified effective CIP cleanability.
- Cost-effective and consistent performance.

Standard design

All media contacting steel components like pump casing, impeller, impeller nut and backplate are in W. 1.4404 (316L). A stainless steel shroud protects the motor and four adjustable legs support the complete unit.

A compression coupling securely attaches the stub shaft to the motor shaft with precision alignment, and the semi-open impeller with a special vane design ensures efficient and gentle handling of the product as it moves through the pump.

As standard, the i-CP2000 pump is equipped with a single mechanical shaft seal but is also available with a double mechanical shaft seal. All have stationary seal rings in acid resistant steel AISI 316L with sealing surfaces in silicon carbide and rotating seal rings in carbon (optional silicon carbide).

Double mechanical seal is equipped with a secondary mechanical seal.

TECHNICAL DATA

Materials	
Product wetted steel parts:	W. 1.4404 (316L)
Adapter:	Ductile iron, zinc coating and painted
Other steel parts:	Stainless steel
Inside surface finish:	Standard blasted
Product wetted elastomers:	EPDM
Ratary seal face	Carbon
Stationary seal face	Silicon Carbide

Motor
Foot-flanged motor according to the IEC metric standard, 2 poles = 3000/3600 rpm at 50/60 Hz, 4 poles = 1500/1800 rpm at 50/60 Hz, IP 55 (with drain hole with labyrinth plug), insulation class F.

Motor sizes	
50Hz:	1.5 - 22 kW
60Hz:	1.5 - 25 kW

Min/max motor speed	
2 poles:	900 - 4000 rpm
4 poles:	900 - 2200 rpm

Warranty
Extended 3-years warranty on i-CP2000 pumps. The warranty covers all non wear parts on the condition that genuine Alfa Laval Spare Parts are used.

OPERATING DATA

Max inlet pressure	
i-CP2010 - 2050:	500 kPa (5 bar)

Temperature	
Temperature range:	-10°C to +140°C (EPDM)
Flush media:	Max 70°C

Double mechanical shaft seal	
Water pressure inlet:	Max. 500 kPa (5 bar)
Water consumption:	0.25 -0.5 l/min

Connections for double mechanical shaft seal	
i-CP2010 - 2050:	1/8" G

Dimensions (mm)

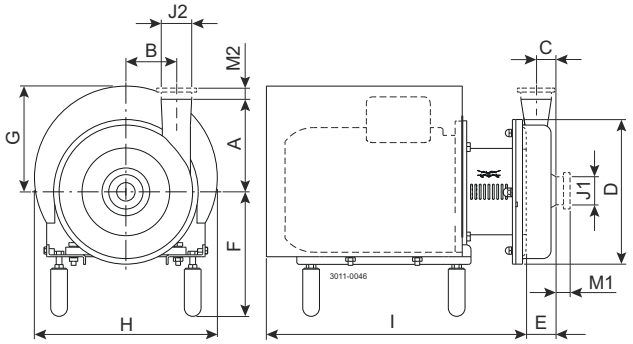

Pump specific measures

Pump Model	ICP-10	ICP-20	ICP-25	ICP-35	ICP-40	ICP-50
A	142	180	193	193	212	205
B	87	88	106	119	126	118
C	23	27	32	23	28	35
D	247	253	303	303	329	329
E	69	54	77	64	63	51

Motor specific measures

Motor IEC	IEC90	IEC100	IEC112	IEC132	IEC160	IEC180
Motor kW	1.5/2.2	3.0	4.0	5.5/7.5	11/15/18.5	22
F(max)*	246	256	259	279	307	312
G	167	177	219	222	288	296
H	288	323	359	383	485	520
I	436	502	502	611	765	840

*Possible to reduce dimension F by min. 15 mm for all pump models.

For smaller models it will be possible to reduce dimension F even further.

Motor overview

Pump Model	ICP-10	ICP-20	ICP-25	ICP-35	ICP-40	ICP-50
Motor range (IEC)	IEC90-IEC112	IEC90-IEC132	IEC132-IEC160	IEC112-IEC160	IEC132-IEC180	IEC132-IEC180

Dimensional data are based on 2 pole, WEG motors.

Connections

		ICP-10	ICP-25	ICP-40	ICP-50
Pump Model		ICP-20			
		ICP-35			
Clamp ISO 2037	M1	21	21	21	21
	M2	21	21	12	21
Union ISO(IDF)	M1	21	21	21	21
	M2	21	21	21	21
Union DIN/ISO	M1	25	30	30	30
	M2	22	25	27	30
Union SMS	M1	24	24	24	35
	M2	20	24	24	24
J1*		63.5 / 2.5"	76.1 / 3"	76.1 / 3"	101.6 / 4"
J2*		51 / 2"	63.5 / 2.5"	63.5 / 2.5"	76.1 / 3"

ESE00886/6

Flow chart

Frequency: 50 Hz Speed (synchr): 3000 rpm

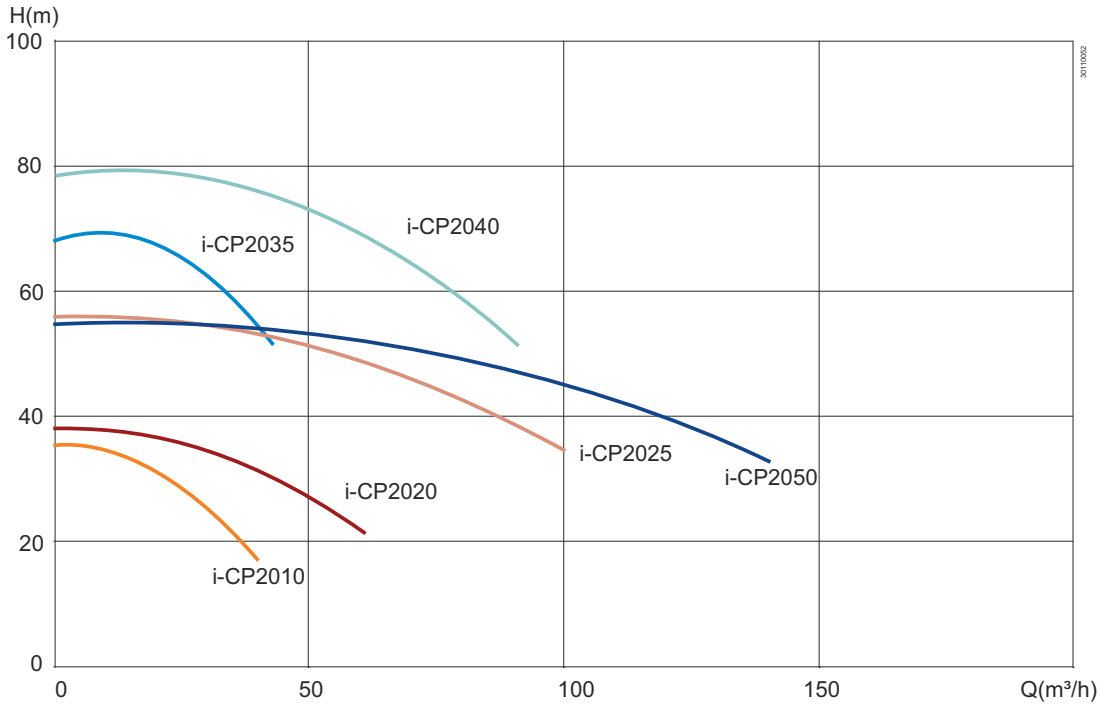

Options

- Impeller with reduced diameter.
- Double mechanical shaft seal.
- Rotating seal face of Silicon Carbide.
- Product wetted elastomers NBR, FPM or FEP.
- ½” vertical drain connection.
- Product wetted surface finish mechanically polished to Ra ≤ 0.8 µm.
- Product wetted surface finish mechanically polished to Ra ≤ 0.5 µm.
- Product wetted surface finish electro polished to Ra ≤ 0.4 µm.
- Surface finish measurement with certificate.
- Material traceability 3.1 according to EN 10204 on media contacting steel components.
- Motor for other voltage and/or frequency.
- Half speed motor.
- Motor with increased safety/flame proof motor.

Ordering

Please state the following when ordering:

- Pump size.
- Connections.
- Impeller diameter.
- Motor size.
- Voltage and frequency.
- Flow, pressure and temperature.
- Density and viscosity of the product.
- Options.

Note!

For further details, see also ESE00887.

This product has EHEDG certification

Authorized Distributor

This document and its contents are subject to copyrights and other intellectual property rights owned by Alfa Laval Corporate AB. No part of this document may be copied, re-produced or transmitted in any form or by any means, or for any purpose, without Alfa Laval Corporate AB’s prior express written permission. Information and services provided in this document are made as a benefit and service to the user, and no representations or warranties are made about the accuracy or suitability of this information and these services for any purpose. All rights are reserved.

© Alfa Laval Corporate AB

How to contact Alfa Laval

Up-to-date Alfa Laval contact details for all countries are always available on our website at www.alfalaval.com