Alfa Laval LKH Prime UltraPure

Centrifugal pumps

Introduction

The Alfa Laval LKH Prime UltraPure Centrifugal Pump is designed for use in high-purity applications where high efficiency, exceptional cleanability, contamination safety, robust design and low maintenance are of paramount importance.

Precision-engineered, the LKH Prime UltraPure delivers greater energy efficiency than similar pumps. Its optimized design, premium motor, tight tolerances and advanced impeller and airscrew design minimize recirculation and reduce energy consumption.

Applications

The Alfa Laval LKH Prime UltraPure is designed to meet the stringent demands and regulations of high-purity applications across the biotechnology and pharmaceutical industries that require equipment with the highest material integrity. It is ideal for tank emptying and CIP return applications; it has verified and effective CIP cleanability. The LKH Prime UltraPure can also be used as a product pump.

All pumps are delivered with a complete Alfa Laval Q-doc package. Q-doc provides easier validation, proof of origin and compliance for inspection purposes according to Good Manufacturing Practice (GMP) and ASME BPE requirements.

The LKH Prime UltraPure pump is available in two sizes to handle capacities up to 70 m3/h and differential pressures up to 4 bar at 50 Hz.

Benefits

- Energy efficient: superior efficiency resulting in reduced energy consumption and CO2 footprint.
- Quiet: operates very quietly compared to other self-priming pumps, thereby improving the working environment.
- Low contamination risk: comes with full material traceability and USP Class VI elastomers to reduce risk of process contamination from extractables.
- Smooth qualification, validation and process control: material traceability, and pump supplied with the Alfa Laval Q-doc package in line with Good Documentation Practices (GDP).

Standard design

All media contacting steel components like pump casing, impeller, airscrew, front cover, recirculation pipe and backplate are in W. 1.4404 (AISI 316L) with material traceability 3.1 according to EN 10204. Product wetted elastomers are specified to USP Class VI, 121°C, Chapter 88 and Chapter 87. A stainless steel shroud protects the motor and four adjustable stainless steel legs support the complete unit.

A compression coupling securely attaches the stub shaft to the motor shaft with precision alignment, and the semi-open impeller with a special vane design ensures efficient handling of the product as it moves through the pump.

As standard, the LKH prime pump is equipped with a single mechanical shaft seal but is also available with a double mechanical shaft seal. The front-loading shaft seal, with the spring and washers mounted on the atmospheric side, makes maintenance fast, easy and inexpensive. It takes just a few minutes to replace the shaft seal. In addition, the balanced design minimizes the risk of seal opening during unforeseen pressure shock.

Working principle

On applications where the pumped media contains a mixture of air and liquid in the suction line, airscrew rotation causes the formation of a continuous liquid ring within the canister.

Due to the eccentric position of the canister relative to the airscrew, an air chamber forms between the liquid ring and the airscrew, which separates into air pockets between the air-screw vanes.

The continuous rotation of the airscrew forces air pockets through the canister into the suction stage of the impeller which are then pumped out via the discharge.

Liquid is returned from the discharge via the recirculation pipe into the canister to ensure the liquid ring is maintained at all times. When there is no air present, the canister and recirculation loop have no function and are fully filled with liquid. The liquid passes through the canister into the suction stage of the impeller, allowing the pump to act as a traditional centrifugal pump.

TECHNICAL DATA

Materials	
Product wetted steel parts:	W. 1.4404 (316L) with material traceability 3.1 according to EN 10204
Other steel parts:	Stainless steel
Inside surface finish:	Mech Ra ≤ 0.5
Product wetted elastomers:	EPDM - USP Class VI, 121°C. Chapter 88, and Chapter 87
Rotary seal face:	Silicon Carbide
Stationary seal face:	Silicon Carbide

Motor
Foot-flanged motor according to the IEC metric standard, 2 poles = 3000/3600 rpm at 50/60 Hz, IP 55 (with drain hole with labyrinth plug), insulation class F.

Motor sizes	
50Hz:	1.5 - 18.5kW
60Hz:	2.5 - 21 kW

Min/max motor speed	
Air evacuation:	2800 - 3600 rpm.
Pumping product (no air):	900 - 3600 rpm.

Warranty
Extended 3-years warranty on LKH Prime UltraPure pumps. The warranty covers all non wear parts on the condition that genuine Alfa Laval Spare Parts are used.

OPERATING DATA

Max inlet pressure	
LKH Prime UltraPure 10 - 20:	500kPa (5 bar)

Air release time	
LKH Prime UltraPure 10 - 20:	Max 15 min

Temperature	
Temperature range:	-10°C to +140°C (EPDM)
Flush media:	Max 70°C

Double mechanical shaft seal	
Water pressure inlet, LKH Prime UltraPure 10 - 20:	Max. 500 kPa (5 bar)
Water consumption:	0.25 - 0.5 l/min

Connections for flushed and double mechanical shaft seal	
LKH Prime UltraPure 10 - 20:	1/8" G

Dimensions

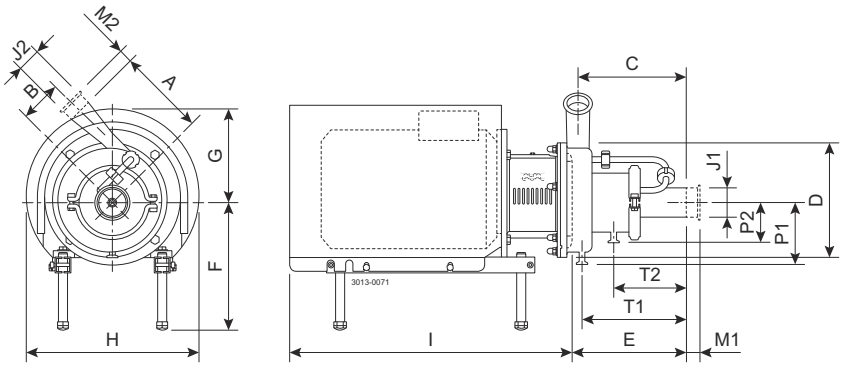

Pump specific measures

Pump Model	LKH Prime UltraPure 10	LKH Prime UltraPure 20
A	174	187
B	85	88
C	222	248
D	247	253
E	245	280
P1	116	123
P2	82	83
T1	219	239
T2	161	170

Motor specific measures

Motor IEC	IEC90	IEC100	IEC112	IEC132	IEC160
Motor kW	**1.5/2.2**	**3.0**	**4.0**	**5.5/7.5**	**11/15/18.5**
F(max)[1]	316	336	339	358	386
G	126	137	136	164	208
H	200	250	250	300	351
I	386	454	453	547	642

[1] Possible to reduce dimension F by min. 59 mm for all pump models.

Motor overview

Pump Model	LKH Prime UP 10	LKH Prime UP 20
Motor range (IEC)	IEC90-IEC132	IEC100-IEC160

Note! Dimensional data are based on 2 pole, ABB motors.

Connections

Pump Model		LKH Prime UltraPure 10	LKH Prime UltraPure 20
Clamp ISO 1127	M1	36	36
	M2	36	36
Clamp ASME BPE	M1	29	29
	M2	29	29
Clamp ISO 2037	M1	21	21
	M2	21	21
Clamp DIN 32676	M1	21	64
	M2	21	21
Flange Asept. A for DIN	M1	47	56
	M2	47	47
Flange Asept. A for ASME	M1	47	56
	M2	47	47
Union Asept. A for DIN	M1	48	100
	M2	48	48
Union Asept. A for ASME	M1	48	60
	M2	48	48
J1[1]		51 / 2"	63,5 / 2,5"
J2[1]		51 / 2"	51 / 2"

[1] Other dimensions available on request.

Drain diameter

	TC Clamp
1/2"	12.7

Flow chart

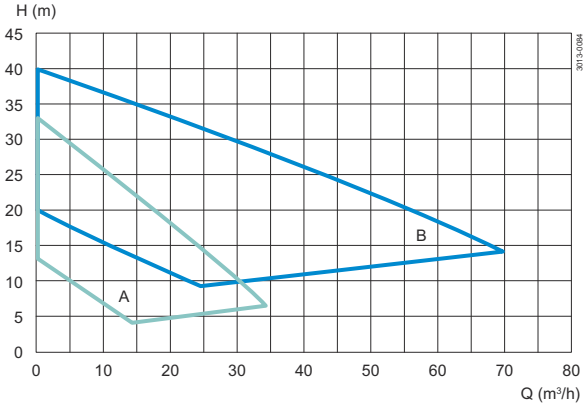

A = LKH Prime UP 10
B = LKH Prime UP 20

Figure 1. Frequency: 50Hz - Speed (synchr): 3000 rpm

Options

- Impeller with reduced diameter.
- Motor for other voltage and/or frequency.
- Motor with increased safety/flame proof motor.
- Double mechanical shaft seal.
- Adjustable pads.
- No drain.
- Product wetted surface finish mechanically polished to Ra ≤ 0.8 µm.
- Product wetted surface finish electropolished to Ra ≤ 0.4 µm.
- Passivated surface.
- Product wetted elastomers FPM or FEP to USP Class VI, 121°C Chapter 88, and Chapter 87.
- Hydrostatic testing with certificate.
- Surface finish measurement with certificate.
- 0° outlet.

Q-doc

Standard documentation package:

- Declaration of compliance with Regulation (EC) No.: 1935/2004.
- Declaration of compliance to EN 10204 type 3.1 (MTR).
- Declaration of compliance to the U.S. Food & Drug Administration CFR 21 (non-metallic parts).
- Declaration of compliance to the U.S. Pharmacopeia (Elastomers and polymers).
- TSE (Transmissible Spongiform Encephalopathy) / ADI (Animal Derivative Ingredient) declaration.
- Declaration of surface finish compliance.
- Declaration of passivation and electro polishing (if specified).
- 3.1 certification in accordance to EN10204.
- Pump performance test certificate.

Optional documentation:

- Hydrostatic test certificate.
- Surface measurement report.

Ordering

Please state the following when ordering:

- Pump size.
- Connections.
- Impeller diameter.
- Motor size.
- Voltage and frequency.

- Flow, pressure and temperature.
- Density and viscosity of the product.
- Options.

This document and its contents are subject to copyrights and other intellectual property rights owned by Alfa Laval Corporate AB. No part of this document may be copied, re-produced or transmitted in any form or by any means, or for any purpose, without Alfa Laval Corporate AB's prior express written permission. Information and services provided in this document are made as a benefit and service to the user, and no representations or warranties are made about the accuracy or suitability of this information and these services for any purpose. All rights are reserved.

200006080-1-EN-GB

© Alfa Laval Corporate AB

How to contact Alfa Laval

Up-to-date Alfa Laval contact details for all countries are always available on our website at www.alfalaval.com