Alfa Laval SX UltraPure

Rotary lobe pumps

Introduction

The Alfa Laval SX UltraPure Rotary Lobe Pump is designed with optimized pump head geometry and multi-lobe rotors to ensure low-shear operation with minimum pulsation. This makes the SX UltraPure the best choice for maintaining the integrity of delicate products in high-purity applications.

The pump is designed according to the most stringent hygienic design standards and with verified, effective Cleaning-in-Place (CIP) and Sterilization-in-Place (SIP).

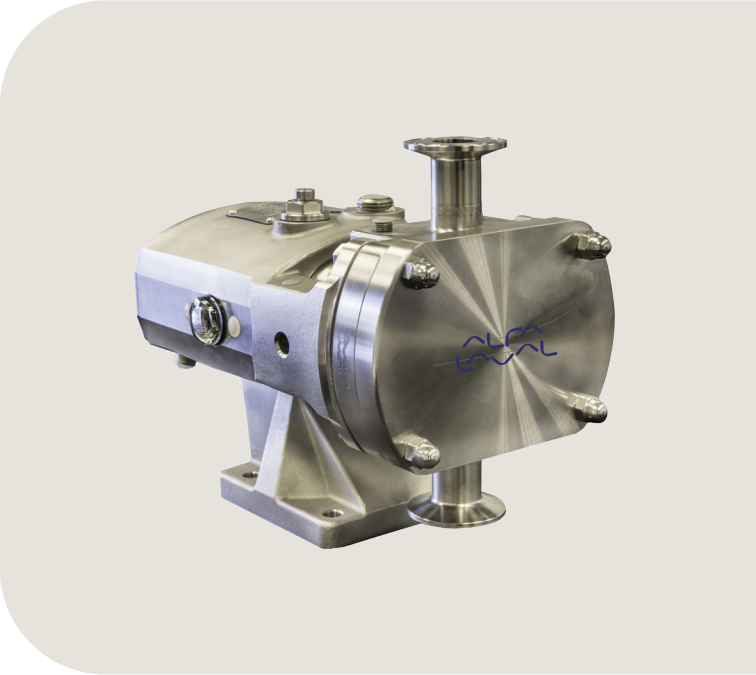

Applications

The SX UltraPure Rotary Lobe Pump is designed for gentle transportation of process fluids in high-purity applications across the biotechnology, pharmaceutical, and home and personal care industries.

The SX UltraPure is available with 14 different pump head displacements based on seven different gearbox modules to handle flow rates up to 115 m^3/h and differential pressures up to 15 bar.

Benefits

- Low pulsation and very gentle pumping, making the pump ideal for sensitive products.
- Minimized shearing to protect end-product quality.
- Low maintenance, increased process uptime.
- Low contamination risk due to full material traceability and USP Class VI elastomers that reduce the risk of process contamination from extractables.
- Smooth qualification, validation and process control: material traceability, and pump supplied with the Alfa Laval Q-doc package in line with Good Documentation Practices.

Standard design

All media contacting steel components, like the rotor case, front cover, rotors and rotor nuts, are in W. 1.4404 (AISI 316L). The stainless steel gearbox provides maximum shaft rigidity and easy oil seal replacement. The gearbox design is universal, which enables the flexibility of mounting pumps with the inlet and outlet ports in either a vertical or horizontal plane by changing the foot and its position.

The standard Alfa Laval SX UltraPure has four-lobe rotors rated to 150°C, facilitating use with CIP and SIP processes.

Fully front-loading and fully interchangeable single, single flushed and double mechanical shaft seals are available. All media contacting elastomers are controlled compression joints, the latest technology where static and dynamic elastomer seals are used to prevent leakage of pumped media to the atmosphere.

The Alfa Laval SX UltraPure can be supplied either as a bare shaft pump or mounted on a base plate complete with coupling, guard, gear motor and shroud for easy, plug-and-play installation.

Working principle

A gear train in the pump gearbox drives the rotors and provides accurate synchronization of the multi-lobe rotors. The movement of the counter-rotating rotors creates a partial vacuum that allows atmospheric pressure or other external pressures to force fluid into the pump chamber. As the rotors revolve, an expanding cavity forms, filling with fluid. As the blades disengage, each dwell forms a cavity. As the rotor blades engage, the cavity diminishes and fluid is displaced into the outlet port.

Certificates

Authorized to carry the 3A symbol

TECHNICAL DATA

Standard specification	
Product wetted steel parts:	W. 1.4404 (316L) with material traceability 3.1 according to EN 10204
Inside surface finish:	Mech Ra ≤ 0.8
Gearbox:	Stainless steel
Base plate:	Stainless steel
Coupling guard:	Stainless steel
Rotor:	Four-lobe
Product wetted elastomers:	EPDM - USP Class VI, 249.8°F. Chapter 88, and Chapter 87
Other elastomers:	FPM
Shaft seal:	Single mechanical (R00)
Rotary seal face:	Silicon Carbide
Stationary seal face:	Silicon Carbide

Shaft seals	
Single, single flush and double mechanical available. All options are fully front loading and interchangeable.	
Max. flush pressure, single flush:	Max. 0.5 bar
Max. flush pressure, double mechanical:	Max. 1 bar over product pressure
Water consumption, flushed or double mechanical:	0.5 l/min
Flush connections:	BSPT or NPT

Temperature	
Max. process and CIP temperature:	150ºC

Motor
Gear motor, 4 poles, to IEC metric standard, 50/60 Hz, suitable for frequency conversion, IP55, insulation class F.

Warranty
Extended 3-years warranty on SX UltraPure pumps. The warranty covers all non wear parts on the condition that genuine Alfa Laval Spare Parts are used.

Media contacting elastomers

All media contacting elastomers are controlled compression joints, the latest technology where static and dynamic elastomer seals are used to prevent pumped media leaking to atmosphere.

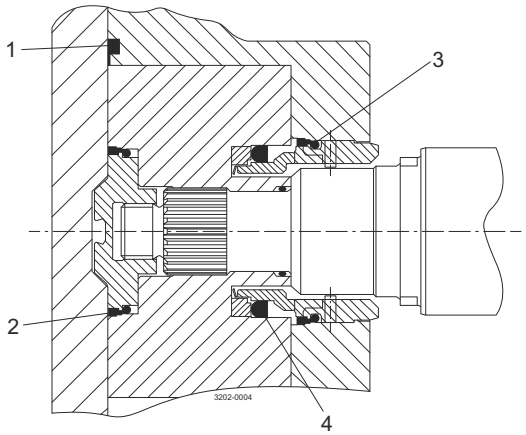

1. Front cover compression joint.
2. Spline sealing cup seal.
3. Cup seal.
4. Squad ring.

Flows/Pressures/Connections

SX Model	Displacement			Inlet and Outlet Connection Size		Differential Pressure [1]		Maximum Speed
	Litre/rev	Imp gall/100 rev	US gall/100 rev	mm	in	bar	psi	rev/min
SX UltraPure 1/005	0.05	1.11	1.32	25	1	12	175	1200
SX UltraPure 1/007	0.07	1.54	1.85	40	1.5	7	100	1200
SX UltraPure 2/013	0.128	2.82	3.38	40	1.5	15	215	1000
SX UltraPure 2/018	0.181	3.98	4.78	50	2	7	100	1000
SX UltraPure 3/027	0.266	5.85	7.03	50	2	15	215	1000
SX UltraPure 3/035	0.35	7.70	9.25	65	2.5	7	100	1000
SX UltraPure 4/046	0.46	10.12	12.15	50	2	15	215	1000
SX UltraPure 4/063	0.63	13.86	16.65	65	2.5	10	145	1000
SX UltraPure 5/082	0.82	18.04	21.67	65	2.5	15	215	600
SX UltraPure 5/115	1.15	25.30	30.38	80	3	10	145	600
SX UltraPure 6/140	1.40	30.80	36.99	80	3	15	215	500
SX UltraPure 6/190	1.90	41.80	50.20	100	4	10	145	500
SX UltraPure 7/250	2.50	55.00	66.05	100	4	15	215	500
SX UltraPure 7/380	3.80	83.60	100.40	150	6	10	145	500

[1] These pressure ratings may vary for pumps with certain threaded connections.

Weight

Model	Bare Shaft Pump (kg)	
	Horizontal porting	Vertical porting
SX UltraPure 1/005	15	16
SX UltraPure 1/007	16	17
SX UltraPure 2/013	32	33
SX UltraPure 2/018	33	34
SX UltraPure 3/027	57	59
SX UltraPure 3/035	59	61
SX UltraPure 4/046	107	110
SX UltraPure 4/063	113	116
SX UltraPure 5/082	155	155
SX UltraPure 5/115	165	165
SX UltraPure 6/140	278	278
SX UltraPure 6/190	290	290
SX UltraPure 7/250	-	340
SX UltraPure 7/380	-	362

Shaft Seal Options

- Single or single flush/quench (steam barrier for aseptic application) R00 type mechanical seals.
- Double R00 type mechanical seal for flush.

All sealing options are fully front loading and fully interchangeable without the need for additional housings or pump component changes. Specialised seal setting of the mechanical seal is not required as the seal is dimensionally set on assembly. This feature further enhances fast and efficient on-site seal interchangeability.

Materials for Mechanical Seals

As standard the SX UltraPure is supplied with EHEDG compliant Silicon Carbide/Silicon Carbide seal faces avoiding any risk of potential extractable contamination.

Standard Specification Options

- Screwed male inlet and outlet ports to DIN11851, SMS, RJT, Triclamp for ASME, DIN 32676 Clamp, DIN 11864-1 (Union) Form A, DIN 11864-2 (Flange) Form A or DIN 11864-3 (Clamp) Form A.
- Heating/Cooling Jacket for Rotorcase Cover.
- Product wetted surface finish electropolished to Ra ≤ 0.38 µm.
- Passivated surface.
- Surface finish measurement with certificate.
- Hydrostatic testing with certificate.
- ATEX compliance.
- Complete pump unit comprising: Pump + stainless steel baseplate + coupling with guard + Geared electric motor suitable for (or supplied with) frequency speed control or manual variable speed drive (advise motor enclosure and electrical supply).
- Low delta ferrite material for product wetted components.
- High alloy materials for product wetted components i.e. AL6XN or Titanium.

Q-doc

Standard documentation package:

- Declaration of compliance with Regulation (EC) No.: 1935/2004.
- Declaration of compliance to EN 10204 type 3.1 (MTR).
- Declaration of compliance to the U.S. Food & Drug Administration CFR 21 (non-metallic parts).
- Declaration of compliance to the U.S. Pharmacopeia (Elastomers and polymers).
- TSE (Transmissible Spongiform Encephalopathy) / ADI (Animal Derivative Ingredient) declaration.
- Declaration of surface finish compliance.
- Declaration of passivation and electro polishing (if specified).
- 3.1 certification in accordance to EN10204.
- Pump performance test certificate.

Optional documentation:

- Hydrostatic test certificate.
- Surface measurement report.

Pump Sizing

In order to correctly size a rotary lobe pump some essential information is required. Provision of this information listed below enables our Technical Support personnel to obtain the optimum pump selection.

Product/Fluid Data:

- Fluid to be pumped.
- Viscosity.
- SG/Density.
- Pumping temperature, minimum, normal and maximum.
- Cleaning in Place temperature(s), minimum, normal and maximum.

Performance Data:

- Flow rate, minimum, normal and maximum.
- Discharge head/pressure (closest to pump outlet).
- Suction condition.

Bareshaft Pump Dimensions

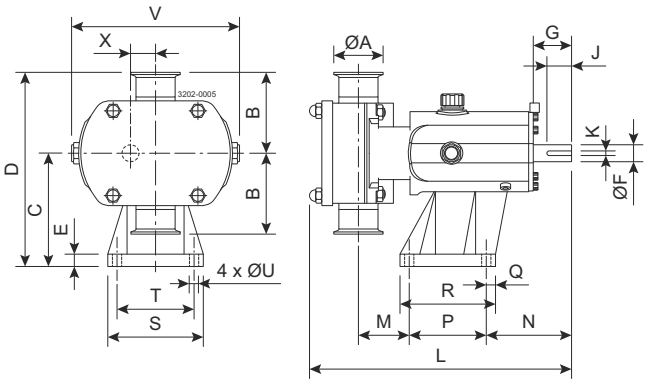

Figure 1. Vertically ported

All dimensions in mm

PUMP	A	B	C	D	E	F	G	J	K	L	M	N	P	Q	R	S	T	U	V	X
SX UltraPure 1/005	25	95	113	208	15	16	40	30	5	281	53	100	80	22	114	104	80	10	174	23.5
SX UltraPure 1/007	40	95	113	208	15	16	40	30	5	294	60	100	80	22	114	104	80	10	174	23.5
SX UltraPure 2/013	40	105	147	252	15	22	50	32	6	325	59	111	100	12	124	124	100	12	213	32.5
SX UltraPure 2/018	50	105	147	252	15	22	50	32	6	341	66	111	100	12	124	124	100	12	213	32.5
SX UltraPure 3/027	50	125	175	300	22	28	61	40	8	431	71	142	155	15	185	155	125	14	246	37.5
SX UltraPure 3/035	65	125	175	300	22	28	61	40	8	447	77	142	155	15	185	155	125	14	246	37.5
SX UltraPure 4/046	50	150	213	363	25	38	80	63	10	514	74	174	200	17	234	184	150	14	301	49.5
SX UltraPure 4/063	65	150	213	363	25	38	80	63	10	533	81	174	200	17	234	184	150	14	301	49.5
SX UltraPure 5/082	65	175	256.5	431.5	30	45	110	70	14	599	61	264	200	20	240	220	180	14	344	60
SX UltraPure 5/115	80	175	256.5	431.5	30	45	110	70	14	629	81	264	200	20	240	220	180	14	344	60
SX UltraPure 6/140	80	190	295	485	30	48	110	70	14	687	77	267	260	20	300	250	210	14	400	70
SX UltraPure 6/190	100	190	295	485	30	48	110	70	14	715	89	267	260	20	300	250	210	14	400	70
SX UltraPure 7/250	100	205	365	570	30	60	110	90	18	763	94	288	280	25	330	290	240	18	475	81.5
SX UltraPure 7/380	150	205	365	570	30	60	110	90	18	817	121	288	280	25	330	290	240	18	475	81.5

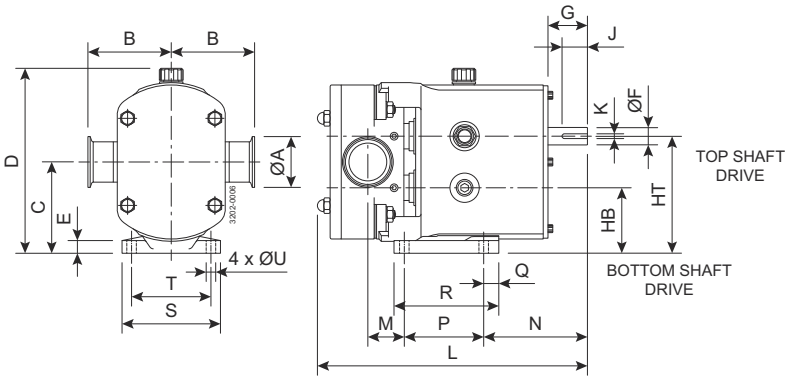

Figure 2. Horizontally ported

All dimensions in mm

PUMP	A	B	C	D	E	F	G	HB	HT	J	K	L	M	N	P	Q	R	S	T	U
SX UltraPure 1/005	25	95	90.5	189	10	16	40	67	114	30	5	281	29	124	80	10	100	100	80	10
SX UltraPure 1/007	40	95	90.5	189	10	16	40	67	114	30	5	294	36	124	80	10	100	100	80	10
SX UltraPure 2/013	40	105	115	233	15	22	50	82.5	147.5	32	6	325	39	131	100	19	132	124	100	12
SX UltraPure 2/018	50	105	115	233	15	22	50	82.5	147.5	32	6	341	46	131	100	19	132	124	100	12
SX UltraPure 3/027	50	125	137.5	272	18	28	60	100	175	40	8	431	68	175	125	30	181	154	125	14
SX UltraPure 3/035	65	125	137.5	272	18	28	60	100	175	40	8	447	74	175	125	30	181	154	125	14
SX UltraPure 4/046	50	150	163	325	20	38	80	113.5	212.5	63	10	514	74	225	150	35	202	184	150	14
SX UltraPure 4/063	65	150	163	325	20	38	80	113.5	212.5	63	10	533	81	225	150	35	202	184	150	14
SX UltraPure 5/082	65	175	195	376	20	45	110	135	255	70	14	599	46	279	180	35	275	210	180	14
SX UltraPure 5/115	80	175	195	376	20	45	110	135	255	70	14	626	66	279	180	35	275	210	180	14
SX UltraPure 6/140	80	190	225	429	20	48	110	155	295	70	14	687	78	266	260	40	370	220	190	14
SX UltraPure 6/190	100	190	225	429	20	48	110	155	295	70	14	715	90	266	260	40	370	220	190	14

Authorized Distributor

This document and its contents are subject to copyrights and other intellectual property rights owned by Alfa Laval Corporate AB. No part of this document may be copied, re-produced or transmitted in any form or by any means, or for any purpose, without Alfa Laval Corporate AB's prior express written permission. Information and services provided in this document are made as a benefit and service to the user, and no representations or warranties are made about the accuracy or suitability of this information and these services for any purpose. All rights are reserved.

200006102-1-EN-GB

© Alfa Laval Corporate AB

How to contact Alfa Laval

Up-to-date Alfa Laval contact details for all countries are always available on our website at www.alfalaval.com