Alfa Laval SolidC

Centrifugal pumps

Introduction

The Alfa Laval SolidC Centrifugal Pump is designed for basic transport of fluids in hygienic applications. It provides reliable, low-maintenance operation. With its hygienic design, cost-effective operation and quick, easy maintenance, the SolidC offers excellent value for money.

Applications

Designed for Cleaning-in-Place (CIP), the Alfa Laval SolidC is ideal for basic duties across the dairy, food, beverage and personal care industries in which hygienic treatment is required. Typical applications are pumping of CIP solutions, utilities, cooling or heating water, and other simple transport duties.

The SolidC pump is available in four sizes to handle capacities up to 75 m3/hour and differential pressures up to 8 bar at 50Hz.

Benefits

- Hygienic: designed according to international hygienic design standards and with verified effective CIP cleanability.
- Cost-effective operation: consistent performance ensured.
- Quick and easy maintenance: wear parts changed in just a few minutes.

Standard design

All media contacting steel components like pump casing, impeller, impeller nut and backplate are in W. 1.4404 (AISI 316L). A stainless steel shroud protects the motor and four adjustable stainless steel legs support the complete unit.

The semi-open impeller with a special vane design and balance holes enhance circulation around the shaft seal and reduce axial forces. This maximizes cleanability while minimizing wear on the shaft seal and motor bearings.

As standard, the SolidC pump is equipped with a single mechanical shaft seal, but is also available with a single flushed mechanical shaft seal. The secondary seal of the flushed seal is a long-lasting lip seal. The front-loading shaft seal, with the spring and washers mounted on the atmospheric side, makes maintenance fast, easy and inexpensive. It takes just a few minutes to replace the shaft seal. In addition, the balanced design minimizes the risk of seal opening during unforeseen pressure shock.

TECHNICAL DATA

Materials	
Product wetted steel parts:	W. 1.4404 (316L)
Other steel parts:	Stainless steel
Inside surface finish:	Standard blasted
Product wetted elastomers:	EPDM
Rotary seal face:	Carbon
Stationary seal face:	Silicon Carbide

Motor
Foot-flanged motor according to the IEC metric standard, 2 poles = 3000/3600 rpm at 50/60 Hz, 4 poles = 1500/1800 rpm at 50/60 Hz, IP 55 (with drain hole with labyrinth plug), insulation class F.

Motor sizes	
50Hz:	1.5 - 22 kW
60Hz:	1.5 - 22 kW

Min/max motor speed	
2 poles:	900 - 4000 rpm
4 poles:	900 - 2200 rpm

Warranty
Extended 3-years warranty on SolidC pumps. The warranty covers all non wear parts on the condition that genuine Alfa Laval Spare Parts are used.

OPERATING DATA

Max inlet pressure	
SolidC 1 - 4:	400kPa (4 bar)

Temperature	
Temperature range:	-10°C to +120°C (EPDM)
Flush media:	Max 70°C

Flushed shaft seal	
Water pressure inlet:	Max. 1 bar
Water consumption:	0.25 -0.5 l/min

Connections for flushed shaft seal	
SolidC 1 - 4:	1/8" G

Dimensions (mm)

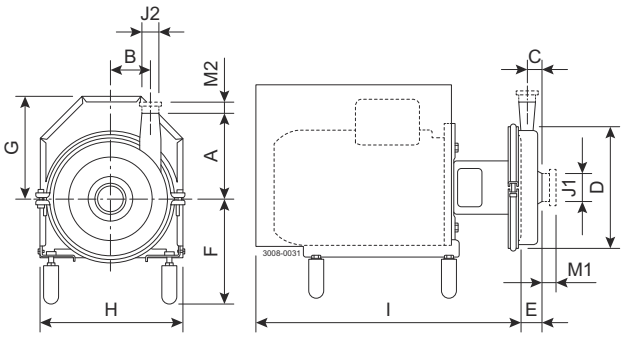

Pump specific measures (mm)

Pump Model	SolidC-1	SolidC-2	SolidC-3	SolidC-4
A	180	200	210	230
B	67	94	121	120
C	28	35	31	27
D	238	227	311	333
E	40	47	44	44

Motor specific measures (mm)

Motor IEC	IEC90	IEC100	IEC112	IEC132	IEC160
Motor kW	**1.5/2.2**	**3.0**	**4.0**	**5.5/7.5**	**11/15/18.5/22**
F(max)[1]	246	256	259	279	307
G	197	200	229	240	292
H	235	285	284	334	384
I	490	528	511	643	771

[1] Possible to reduce dimension F by min. 15 mm for all pump models. For smaller models it will be possible to reduce dimension F even further.

Motor overview

Pump Model	SolidC-1	SolidC-2	SolidC-3	SolidC-4
Moter range (IEC)	IEC90-IEC112	IEC100-IEC160	IEC132-IEC160	IEC132-IEC160

Note! Dimensional data are based on 2 pole, WEGmotors.

Connections (mm)

Pump Model		SolidC-1	SolidC-2	SolidC-3	SolidC-4
Clamp ISO 2037	M1	21	21	21	21
	M2	21	21	21	21
Union ISO(IDF)	M1	21	21	21	21
	M2	21	21	21	21
Union DIN/ISO	M1	23	61	61	61
	M2	22	22	22	23
Union SMS	M1	20	24	24	24
	M2	20	20	20	20
Union (BS) RJT	M1	27	27	27	27
	M2	27	27	27	27
Union DS	M1	20	24	24	24
	M2	20	20	20	20
J1[1]		51 / 2"	63.5 / 2.5"	76.1 / 3"	76.1 / 3"
J2[1]		38 / 1.5"	38 / 1.5"	38 / 1.5"	51 / 2"

[1] Other dimensions available on request. ESE00265/13

Flow chart

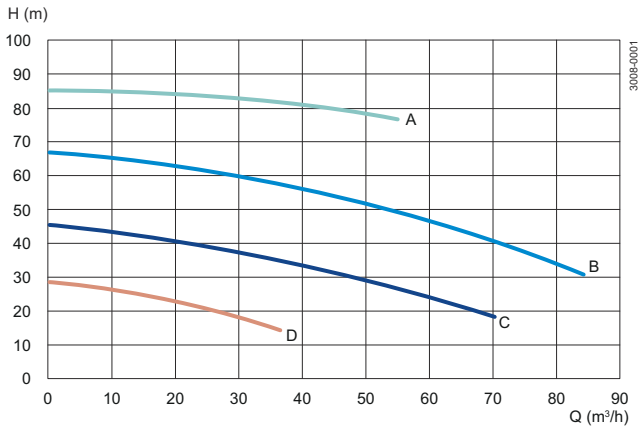

A = SolidC-4 D = SolidC-1
B = SolidC-3
C = SolidC-2

Figure 1. Frequency: 50 Hz Speed (synchr): 3000 rpm

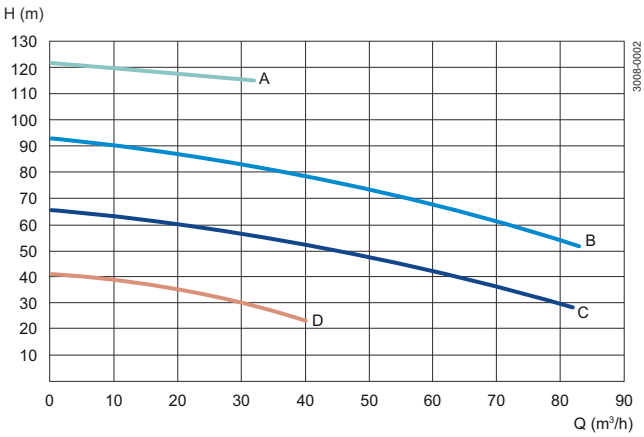

A = SolidC-4 D = SolidC-1
B = SolidC-3
C = SolidC-2

Figure 2. Frequency: 60 Hz Speed (synchr): 3600 rpm

Options

- Impeller with reduced diameter.
- Flushed shaft seal.
- Rotating seal face of Silicon Carbide.
- Product wetted elastomers NBR or FPM.
- Product wetted surface finish mechanically polished to Ra ≤ 0.8 µm.
- Surface finish measurement with certificate (Ra ≤ 0.8 µm).

- Motor for other voltage and/or frequency.
- Half speed motor.

Ordering

Please state the following when ordering:

- Pump size.
- Connections.
- Impeller diameter.
- Motor size.
- Voltage and frequency.
- Flow, pressure and temperature.
- Density and viscosity of the product.
- Options.

Note! For further details, see also ESE00797.

This document and its contents are subject to copyrights and other intellectual property rights owned by Alfa Laval Corporate AB. No part of this document may be copied, re-produced or transmitted in any form or by any means, or for any purpose, without Alfa Laval Corporate AB's prior express written permission. Information and services provided in this document are made as a benefit and service to the user, and no representations or warranties are made about the accuracy or suitability of this information and these services for any purpose. All rights are reserved.

200006098-1-EN-GB

© Alfa Laval Corporate AB

How to contact Alfa Laval

Up-to-date Alfa Laval contact details for all countries are always available on our website at www.alfalaval.com