Alfa Laval SX

Rotary lobe pumps

Introduction

The Alfa Laval SX Rotary Lobe Pump is designed with optimized pump head geometry and multi-lobe rotors to ensure low-shear operation with minimum pulsation. This makes the SX the best choice for maintaining the integrity of delicate products.

The pump is designed according to the most stringent hygienic design standards and with verified, effective Cleaning-in-Place (CIP) and Sterilization-in-Place (SIP).

Applications

The SX Rotary Lobe pump is designed for gentle transportation of process fluids in hygienic and ultra-clean applications in the biotechnology and pharmaceutical industries, in the home and personal care sector, and for demanding food applications.

The SX Rotary Lobe Pump is available with 14 different pump head displacements based on seven different gearbox modules to handle flow rates up to 115 m^3/h and differential pressures up to 15 bar.

Benefits

- Low pulsation and very gentle pumping, making the pump ideal for sensitive products.
- Minimized shearing for protecting end-product quality.
- Low maintenance, increased process uptime.
- Maximized performance and minimized risk of contamination.

Standard design

All media contacting steel components, like the rotor case, front cover, rotors and rotor nuts, are in W. 1.4404 (AISI 316L). The robust stainless steel gearbox provides maximum shaft rigidity and easy oil seal replacement. The gearbox design is universal which enables the flexibility of mounting pumps with the inlet and outlet ports in either a vertical or horizontal plane by changing the foot and its position.

The standard Alfa Laval SX has four-lobe rotors rated to 150°C, facilitating use with CIP and SIP processes.

Fully front-loading and fully interchangeable single, single flushed, and double mechanical shaft seals are available. All media contacting elastomers are controlled compression joints, the latest technology where static and dynamic

elastomer seals are used to prevent leakage of pumped media to the atmosphere.

The Alfa Laval SX can be supplied either as a bare shaft pump or mounted on a base plate complete with coupling, guard, gear motor and shroud for easy, plug-and-play installation.

Working principle

A gear train in the pump gearbox drives the rotors and provides accurate synchronization of the multi-lobe rotors. The movement of the counter-rotating rotors creates a partial vacuum that allows atmospheric pressure or other external pressures to force fluid into the pump chamber. As the rotors revolve, an expanding cavity forms, filling with fluid. As the blades disengage, each dwell forms a cavity. As the rotor blades engage, the cavity diminishes, and fluid is displaced into the outlet port.

TECHNICAL DATA

Standard specification	
Product wetted steel parts:	W. 1.4404 (316L)
Inside surface finish:	Mech Ra ≤ 0.8
Gearbox:	Stianless steel
Base plate:	Stainless steel
Coupling guard:	Stainless steel
Rotor:	Four-lobe
Product wetted elastomers:	EPDM
Other elastomers:	FPM
Shaft seal:	Single mechanical (R00)
Rotary seal face:	Carbon
Stationary seal face:	Stainless steel

Shaft seals	
Single, single flush and double mechanical available. All options are fully front loading and interchangeable.	
Max flush pressure, single flush:	0.5 bar
Max flush pressure, double mechanical:	1 bar over product pressure
Water consumption, flushed or double mechanical:	0.5 l/min
Flush connections:	BSPT or NPT

Temperature	
Max process and CIP temperature:	150°C

Motor
Gear motor, 4 poles, to IEC metric standard, 50/60 Hz, suitable for frequency conversion, IP55, insulation class F.

Warranty
Extended 3-years warranty on SX pumps. The warranty covers all non wear parts on the condition that genuine Alfa Laval Spare Parts are used.

Media contacting elastomers

All media contacting elastomers are controlled compression joints, the latest technology where static and dynamic elastomer seals are used to prevent pumped media leaking to atmosphere.

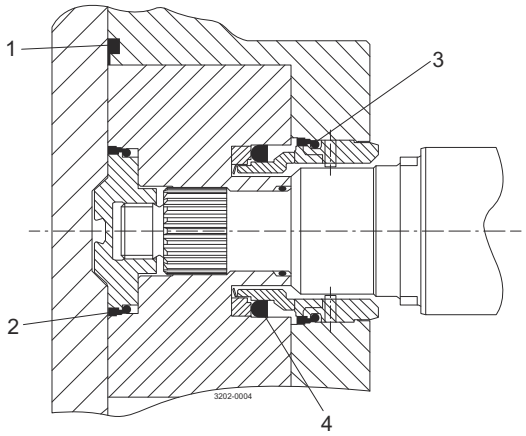

1. Front cover compression joint
2. Spline sealing cup seal
3. Cup seal
4. Squad ring

Flows/Pressures/Connections

SX Model	Displacement			Inlet and Outlet Connection Size		Differential Pressure (see note 1)		Maximum Speed
	Litre/rev	Imp gall/100 rev	US gall/100 rev	mm	in	bar	psi	rev/min
SX1/005	0.05	1.11	1.32	25	1	12	175	1200
SX1/007	0.07	1.54	1.85	40	1.5	7	100	1200
SX2/013	0.128	2.82	3.38	40	1.5	15	215	1000
SX2/018	0.181	3.98	4.78	50	2	7	100	1000
SX3/027	0.266	5.85	7.03	50	2	15	215	1000
SX3/035	0.35	7.70	9.25	65	2.5	7	100	1000

SX Model	Displacement			Inlet and Outlet Connection Size		Differential Pressure (see note 1)		Maximum Speed
	Litre/rev	Imp gall/100 rev	US gall/100 rev	mm	in	bar	psi	rev/min
SX4/046	0.46	10.12	12.15	50	2	15	215	1000
SX4/063	0.63	13.86	16.65	65	2.5	10	145	1000
SX5/082	0.82	18.04	21.67	65	2.5	15	215	600
SX5/115	1.15	25.30	30.38	80	3	10	145	600
SX6/140	1.40	30.80	36.99	80	3	15	215	500
SX6/190	1.90	41.80	50.20	100	4	10	145	500
SX7/250	2.50	55.00	66.05	100	4	15	215	500
SX7/380	3.80	83.60	100.40	150	6	10	145	500

Note 1. These pressure ratings may vary for pumps with certain threaded connections.

Maximum Solid Size Capability

Pump sizes	Max. size of spherical solids (mm)
SX1	7
SX2	10
SX3	13
SX4	16
SX5	19
SX6	25
SX7	28

Weight

Model	Bare Shaft Pump (kg)	
	Horizontal porting	Vertical porting
SX1/005	15	16
SX1/007	16	17
SX2/013	32	33
SX2/018	33	34
SX3/027	57	59
SX3/035	59	61
SX4/046	107	110
SX4/063	113	116
SX5/082	155	155
SX5/115	165	165
SX6/140	278	278
SX6/190	290	290
SX7/250	336	344
SX7/380	358	366

Shaft Seal Options

- Single or single flush/quench (steam barrier for aseptic application) R00 type mechanical seals.
- Double R00 type mechanical seal for flush.

All sealing options are fully front loading and fully interchangeable without the need for additional housings or pump component changes. Specialised seal setting of the mechanical seal is not required as the seal is dimensionally set on assembly. This feature further enhances fast and efficient on-site seal interchangeability.

Materials for Mechanical Seals

Carbon/Stainless Steel, Silicon Carbide/Silicon Carbide or variations of these materials to suit fluid being pumped and/or application requirements. The seal seat and face material combinations are all EHEDG compliant.

Standard Specification Options

- Screwed male inlet and outlet ports to DIN11851, DIN11864, SMS, ISS/IDF, RJT or Tri-clamp.
- Heating/Cooling Jacket for Rotorcase Cover.
- ATEX compliance.
- Complete pump unit comprising: Pump + Baseplate (mild or stainless steel) + coupling with guard + Geared electric motor suitable for (or supplied with) frequency speed control or manual variable speed drive (advise motor enclosure and electrical supply).

Pump Sizing

In order to correctly size a rotary lobe pump some essential information is required. Provision of this information listed below enables our Technical Support personnel to obtain the optimum pump selection.

Product/Fluid Data

- Fluid to be pumped
- Viscosity
- SG/Density
- Pumping temperature, minimum, normal and maximum
- Cleaning in Place temperature(s), minimum, normal and maximum

Performance Data

- Flow rate, minimum, normal and maximum
- Discharge head/pressure (closest to pump outlet)
- Suction condition

Bareshaft Pump Dimensions

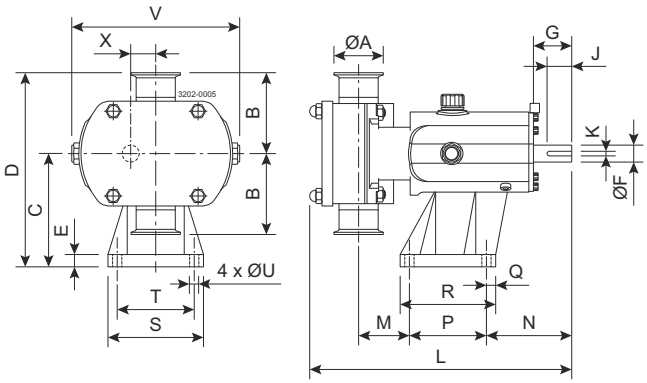

Figure 1. Vertically ported

All dimensions in mm

PUMP	A	B	C	D	E	F	G	J	K	L	M	N	P	Q	R	S	T	U	V	X
SX1/005	25	95	113	208	15	16	40	30	5	283	53.5	100	80	22	114	104	80	10	174	23.5
SX1/007	40	95	113	208	15	16	40	30	5	296	60	100	80	22	114	104	80	10	174	23.5
SX2/013	40	105	147	252	16	22	50	32	6	327	58.5	111	100	12	124	124	100	12	213	32.5
SX2/018	50	105	147	252	16	22	50	32	6	343	65.5	111	100	12	124	124	100	12	213	32.5
SX3/027	50	125	175	300	22	28	60	40	8	434	72.5	142	155	15	185	155	125	14	246	37.5
SX3/035	65	125	175	300	22	28	60	40	8	450	78	142	155	15	185	155	125	14	246	37.5
SX4/046	50	150	213	363	25	38	80	63	10	517	75	174	200	17	234	184	150	14	301	49.5
SX4/063	65	150	213	363	25	38	80	63	10	536	81.5	174	200	17	234	184	150	14	301	49.5
SX5/082	65	175	257	432	27	45	110	70	14	602	61	264	200	20	240	220	180	14	351	60
SX5/115	80	175	257	432	27	45	110	70	14	630	80.5	264	200	20	240	220	180	14	351	60
SX6/140	80	190	295	485	27	48	110	70	14	691	78	267	260	20	300	250	210	14	400	70
SX6/190	100	190	295	485	27	48	110	70	14	719	90	267	260	20	300	250	210	14	400	70
SX7/250	100	205	365	570	26	60	110	90	18	767	94	288	280	25	330	290	240	18	475	81.5
SX7/380	150	205	365	570	26	60	110	90	18	821	121	288	280	25	330	290	240	18	475	81.5

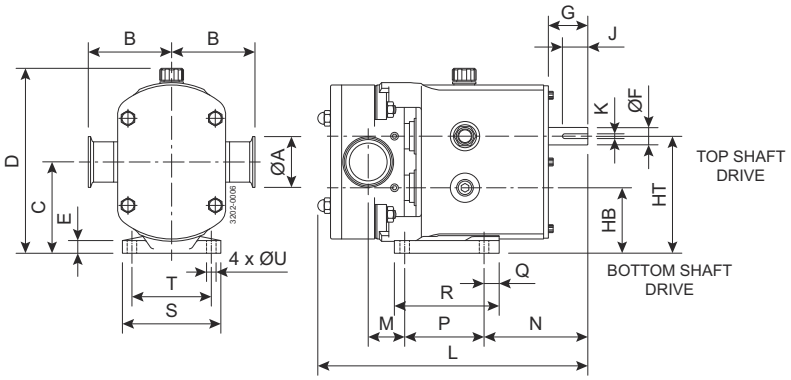

Figure 2. Horizontally ported

All dimensions in mm

PUMP	A	B	C	D	E	F	G	HB	HT	J	K	L	M	N	P	O	R	S	T	U
SX1/005	25	95	90.5	189	10	16	40	67	114	30	5	283	29.5	124	80	10	100	100	80	10
SX1/007	40	95	90.5	189	10	16	40	67	114	30	5	296	36	124	80	10	100	100	80	10
SX2/013	40	105	115	233	16	22	50	82.5	147.5	32	6	327	38.5	131	100	19	132	124	100	12
SX2/018	50	105	115	233	16	22	50	82.5	147.5	32	6	343	45.5	131	100	19	132	124	100	12
SX3/027	50	125	137.5	272	18	28	60	100	175	40	8	434	69.5	175	125	30	181	154	125	14
SX3/035	65	125	137.5	272	18	28	60	100	175	40	8	450	75	175	125	30	181	154	125	14
SX4/046	50	150	163	325	20	38	80	113.5	212.5	63	10	517	75	224	150	35	202	184	150	14
SX4/063	65	150	163	325	20	38	80	113.5	212.5	63	10	536	81.5	224	150	35	202	184	150	14
SX5/082	65	175	195	382	22	45	110	135	255	70	14	602	66	279	180	35	240	210	180	14
SX5/115	80	175	195	382	22	45	110	135	255	70	14	630	85.5	279	180	35	240	210	180	14
SX6/140	80	190	225	436	22	48	110	155	295	70	14	691	78	267	260	20	300	220	190	14
SX6/190	100	190	225	436	22	48	110	155	295	70	14	719	90	267	260	20	300	220	190	14
SX7/250	100	205	276.5	524	27	60	110	195	358	90	18	767	99	273	290	25	340	290	240	18
SX7/380	150	205	276.5	524	27	60	110	195	358	90	18	821	126	273	290	25	340	290	240	18

Authorized Distributor

This document and its contents are subject to copyrights and other intellectual property rights owned by Alfa Laval Corporate AB. No part of this document may be copied, re-produced or transmitted in any form or by any means, or for any purpose, without Alfa Laval Corporate AB's prior express written permission. Information and services provided in this document are made as a benefit and service to the user, and no representations or warranties are made about the accuracy or suitability of this information and these services for any purpose. All rights are reserved.

200006104-2-EN-GB

© Alfa Laval Corporate AB

How to contact Alfa Laval

Up-to-date Alfa Laval contact details for all countries are always available on our website at www.alfalaval.com