# Alfa Laval SRU

## Rotary lobe pump

### Introduction

The Alfa Laval SRU Rotary Lobe Pump is a reliable positive displacement pump for the gentle handling of sensitive process fluids. The pump is carefully engineered to provide reliable performance, trouble-free operation and superior energy efficiency for demanding applications. It is an excellent choice for duties that require contamination-proof pumps to meet high standards of hygiene, low-shear and low-pulsation operation.

The pump is designed according to the most stringent hygienic design standards and with verified, effective Cleaning-in-Place.

### Applications

The SRU Rotary Lobe Pump is designed for gentle handling of sensitive process fluids across the dairy, food, beverage, brewing, chemical, pharmaceutical, and home and personal care industries.

Its smooth, low-shear pumping action makes the pump suitable for handling media of varying viscosities, whether low or high-from creams, gels, emulsions, and aerated mixtures to delicate cells and organic solids in suspension.

The SRU Rotary Lobe Pump is available with 12 different pump head displacements based on six different gearbox modules to handle flow rates up to 106 $m^3/h$ and differential pressures up to 20 bar.

### Benefits

- Consistent performance.
- Minimal risk of contamination.
- Low maintenance, increased process uptime.
- Modular design for greater flexibility to configure exactly the right solution for specific process requirements.

### Standard design

All media contacting steel components, like the rotor case, front cover, rotors and rotor nuts, are in W. 1.4404 (AISI 316L). The robust stainless steel gearbox provides maximum shaft rigidity and easy oil seal replacement. The gearbox design is universal, which enables the flexibility of mounting pumps with the inlet and outlet ports in either a vertical or horizontal plane by changing the foot and its position.

The standard Alfa Laval SRU Rotary Lobe Pump has tri-lobe rotors. Optional bi-lobe rotors for handling fluids containing large delicate solids are available. All rotors are available in three temperature ratings enabling the pump to be operated at maximum process temperatures of 70°C, 130°C and 200°C for both fluid pumped and CIP.

Single, single flushed, and double mechanical shaft seals as well as packed gland, unflushed or flushed, are available.

The Alfa Laval SRU can be supplied either as a bare shaft pump or mounted on a base plate complete with coupling, guard, gear motor and shroud for easy, plug-and-play installation.

### Working principle

A gear train in the pump gearbox drives the rotors and provides accurate synchronization of the tri-lobe rotors. The movement of the counter-rotating rotors creates a partial vacuum that allows atmospheric pressure or other external pressures to force fluid into the pump chamber. As the rotors revolve, an expanding cavity forms, filling with fluid. As the blades disengage, each dwell forms a cavity. As the rotor blades engage, the cavity diminishes and fluid is displaced into the outlet port.

## TECHNICAL DATA

| Standard specification | |
|---|---|
| Product wetted steel parts: | W. 1.4404 (316L) |
| Inside surface finish: | Mech Ra ≤ 0.8 |
| Gearbox: | Stainless steel |
| Base plate: | Stainless steel |
| Coupling guard: | Stainless steel |
| Rotor: | Tri-lobe, 70°C |
| Product wetted elastomers: | EPDM |
| Other elastomers: | NBR |
| Shaft seal: | Single mechanical (R90) |
| Rotary seal face: | Carbon |
| Stationary seal face: | Stainless steel |

| Shaft seals | |
|---|---|
| Single, single flush, double mechanical and packed gland, flushed and unflushed, available. For EHEDG compliance Hyclean type must be used. | |
| Max flush pressure, single flush: | 0.5 bar |
| Max flush pressure, double mechanical: | 1 bar over product pressure |
| Max flush pressure, packed gland, flushed: | 1 bar over product pressure |
| Water consumption, flushed or double mechanical: | 0.5 l/min |
| Flush connections: | BSPT or NPT |

| Temperature | |
|---|---|
| Max process and CIP temperature (dependent on rotor selection) | 70°C, 130°C or 200°C |

| Motor |
|---|
| Gear motor, 4 poles, to IEC metric standard, 50/60 Hz, suitable for frequency conversion, IP55, insulation class F. |

| Warranty |
|---|
| Extended 3-years warranty on SRU pumps. The warranty covers all non wear parts on the condition that genuine Alfa Laval Spare Parts are used. |

## Flows/Pressures/Connections

| SRU Series | Build Selection | | | SRU Model | Displacement | | | Inlet and Outlet Connection Size | | | | Differential Pressure (see note 1) | | Maximum Speed |
|---|---|---|---|---|---|---|---|---|---|---|---|---|---|---|
| | Pump Head Code | Gear-box | Shaft | | Litres/rev | Imp gall/ 100 rev | US gall/ 100 rev | Hygienic mm | Hygienic in | Enlarged mm | Enlarged in | bar | psi | rev/min |
| 1 | 005 | L or H | D | SRU1/005/LD or HD | 0.053 | 1.17 | 1.4 | 25 | 1 | - | - | 8 | 115 | 1000 |
| | 008 | L or H | D | SRU1/008/LD or HD | 0.085 | 1.87 | 2.25 | 25 | 1 | 40 | 1.5 | 5 | 75 | 1000 |
| 2 | 013 | L or H | S | SRU2/013/LS or HS | 0.128 | 2.82 | 3.38 | 25 | 1 | 40 | 1.5 | 10 | 145 | 1000 |
| | 013 | L or H | D | SRU2/013/LD or HD | 0.128 | 2.82 | 3.38 | 25 | 1 | 40 | 1.5 | 15 | 215 | 1000 |
| | 018 | L or H | S | SRU2/018/LS or HS | 0.181 | 3.98 | 4.78 | 40 | 1.5 | 50 | 2 | 7 | 100 | 1000 |
| | 018 | L or H | D | SRU2/018/LD or HD | 0.181 | 3.98 | 4.78 | 40 | 1.5 | 50 | 2 | 10 | 145 | 1000 |
| 3 | 027 | L or H | S | SRU3/027/LS or HS | 0.266 | 5.85 | 7.03 | 40 | 1.5 | 50 | 2 | 10 | 145 | 1000 |
| | 027 | L or H | D | SRU3/027/LD or HD | 0.266 | 5.85 | 7.03 | 40 | 1.5 | 50 | 2 | 15 | 215 | 1000 |
| | 038 | L or H | S | SRU3/038/LS or HS | 0.384 | 8.45 | 10.15 | 50 | 2 | 65 | 2.5 | 7 | 100 | 1000 |
| | 038 | L or H | D | SRU3/038/LD or HD | 0.384 | 8.45 | 10.15 | 50 | 2 | 65 | 2.5 | 10 | 145 | 1000 |
| 4 | 055 | L or H | S | SRU4/055/LS or HS | 0.554 | 12.19 | 14.64 | 50 | 2 | 65 | 2.5 | 10 | 145 | 1000 |
| | 055 | L or H | D | SRU4/055/LD or HD | 0.554 | 12.19 | 14.64 | 50 | 2 | 65 | 2.5 | 20 | 290 | 1000 |
| | 079 | L or H | S | SRU4/079/LS or HS | 0.79 | 17.38 | 20.87 | 65 | 2.5 | 80 | 3 | 7 | 100 | 1000 |
| | 079 | L or H | D | SRU4/079/LD or HD | 0.79 | 17.38 | 20.87 | 65 | 2.5 | 80 | 3 | 15 | 215 | 1000 |
| 5 | 116 | L or H | S | SRU5/116/LS or HS | 1.16 | 25.52 | 30.65 | 65 | 2.5 | 80 | 3 | 10 | 145 | 600 |
| | 116 | L or H | D | SRU5/116/LD or HD | 1.16 | 25.52 | 30.65 | 65 | 2.5 | 80 | 3 | 20 | 290 | 600 |
| | 168 | L or H | S | SRU5/168/LS or HS | 1.68 | 36.95 | 44.39 | 80 | 3 | 100 | 4 | 7 | 100 | 600 |
| | 168 | L or H | D | SRU5/168/LD or HD | 1.68 | 36.95 | 44.39 | 80 | 3 | 100 | 4 | 15 | 215 | 600 |
| 6 | 260 | L or H | S | SRU6/260/LS or HS | 2.60 | 57.20 | 68.70 | 100 | 4 | 100 | 4 | 10 | 145 | 600 |
| | 260 | L or H | D | SRU6/260/LD or HD | 2.60 | 57.20 | 68.70 | 100 | 4 | 100 | 4 | 20 | 290 | 600 |
| | 353 | L or H | S | SRU6/353/LS or HS | 3.53 | 77.65 | 93.26 | 100 | 4 | 150 | 6 | 7 | 100 | 600 |
| | 353 | L or H | D | SRU6/353/LD or HD | 3.53 | 77.65 | 93.26 | 100 | 4 | 150 | 6 | 15 | 215 | 600 |

L - Horizontal Porting
H - Vertical Porting
S - Stainless Steel
D - Duplex Stainless Steel

**Note 1. These pressure ratings may vary for pumps with certain threaded connections.**

## Maximum Solid Size Capability

| | Max. size of spherical solids | | | |
|---|---|---|---|---|
| | Bi-lobe rotors | | Tri-lobe rotors | |
| | mm | in | mm | in |
| SRU1/005 | 8 | 0.31 | 6 | 0.24 |
| SRU1/008 | 8 | 0.31 | 6 | 0.24 |
| SRU2/013 | 8 | 0.31 | 6 | 0.24 |
| SRU2/018 | 13 | 0.51 | 9 | 0.35 |
| SRU3/027 | 13 | 0.51 | 9 | 0.35 |
| SRU3/038 | 16 | 0.63 | 11 | 0.43 |
| SRU4/055 | 16 | 0.63 | 11 | 0.43 |
| SRU4/079 | 22 | 0.87 | 15 | 0.59 |
| SRU5/116 | 22 | 0.87 | 15 | 0.59 |
| SRU5/168 | 27 | 1.06 | 18 | 0.71 |
| SRU6/260 | 27 | 1.06 | 18 | 0.71 |
| SRU6/353 | 37 | 1.46 | 24 | 0.94 |

## Weight

| | Bare Shaft Pump (kg) | |
|---|---|---|
| | Horizontal porting | Vertical porting |
| SRU1/005 | 15 | 16 |
| SRU1/008 | 17 | 18 |
| SRU2/013 | 28 | 30 |
| SRU2/018 | 29 | 31 |
| SRU3/027 | 53 | 56 |
| SRU3/038 | 56 | 59 |
| SRU4/055 | 105 | 111 |
| SRU4/079 | 110 | 116 |
| SRU5/116 | 148 | 185 |
| SRU5/168 | 156 | 193 |
| SRU6/260 | 228 | 260 |
| SRU6/353 | 233 | 265 |

## Shaft Seal Options

- Single or single flush/quench. R90 or Hyclean type mechanical seals.
- Double R90 type mechanical seal for flush (steam barrier for aseptic application).
- Packed gland (unflushed or flushed versions).

**Note!** EHEDG compliance only for Hyclean type mechanical seals.

## Materials for Mechanical Seals

Carbon/Stainless steel, Tungsten Carbide/Tungsten Carbide, Silicon Carbide/Silicon Carbide or variations of these materials to suit fluid being pumped and/or application requirements. (N.B. Material variants are not available on all R90/Hyclean seal types).

## Pump Sizing

In order to correctly size a rotary lobe pump some essential information is required. Provision of this information listed below enables our Technical Support personnel to obtain the optimum pump selection.

## Product/Fluid Data

- Fluid to be pumped
- Viscosity
- SG/Density
- Pumping temperature, minimum, normal and maximum
- Cleaning in Place temperature(s), minimum, normal and maximum

## Performance Data

- Flow rate, minimum, normal and maximum
- Discharge head/pressure (closest to pump outlet)
- Suction condition

## Standard Specification Options

- Specification of inlet and outlet ports (Screwed male to BSP, DIN11851, SMS. ISS/IDF, RJT, or Flanged to EN1092-1 B1 PN16, ASA/ANSI 150, BS10E and other standards).
- Rotorcase Cover with integral Pressure Relief Valve.
- Heating/Cooling Saddle Jackets for Rotorcase and Jacket for Rotorcase Cover (not available when relief valve fitted).
- Bi-lobe Rotors in stainless steel and non-galling alloy.
- Full material traceability on request to BS EN10204 3.1.
- ATEX compliance.
- Complete pump unit comprising: Pump + Baseplate (mild or stainless steel) + coupling with guard + Geared electric motor suitable for (or supplied with) frequency speed control or manual variable speed drive (advise motor enclosure and electrical supply).

## Dimensions (mm)

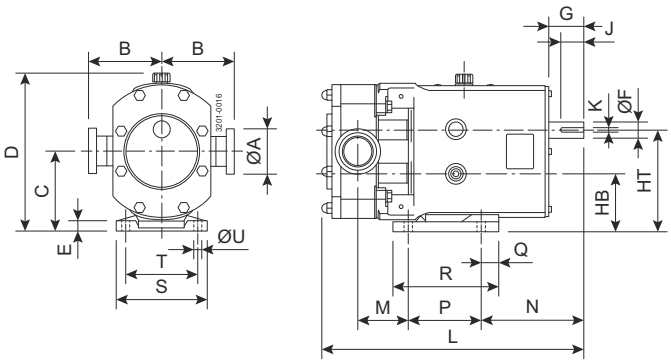


**Figure 1. Horizontally ported**

A1 — denotes hygienic port dimension

A2 — denotes enlarged port dimension

| PUMP | A1 | A2 | B | C | D | E | F | G | HB | HT | J | K | L | M | N | P | Q | R | S | T | U |
|---|---|---|---|---|---|---|---|---|---|---|---|---|---|---|---|---|---|---|---|---|---|
| SRU1/005/L | 25 | - | 95 | 90.5 | 189 | 10 | 16 | 40 | 68 | 113 | 30 | 5 | 284 | 42 | 124 | 80 | 10 | 100 | 100 | 80 | 10 |
| SRU1/008/L | 25 | 40 | 95 | 90.5 | 189 | 10 | 16 | 40 | 68 | 113 | 30 | 5 | 294 | 48 | 124 | 80 | 10 | 100 | 100 | 80 | 10 |
| SRU2/013/L | 25 | 40 | 105 | 115 | 233 | 16 | 22 | 50 | 85 | 145 | 32 | 6 | 339 | 60 | 131 | 100 | 19 | 132 | 124 | 100 | 12 |
| SRU2/018/L | 40 | 50 | 105 | 115 | 233 | 16 | 22 | 50 | 85 | 145 | 32 | 6 | 349 | 63.5 | 131 | 100 | 19 | 132 | 124 | 100 | 12 |
| SRU3/027/L | 40 | 50 | 125 | 137.5 | 272 | 18 | 28 | 60 | 100 | 175 | 40 | 8 | 439 | 82.5 | 176 | 125 | 30 | 181 | 154 | 125 | 14 |
| SRU3/038/L | 50 | 65 | 125 | 137.5 | 272 | 18 | 28 | 60 | 100 | 175 | 40 | 8 | 452 | 87 | 176 | 125 | 30 | 181 | 154 | 125 | 14 |
| SRU4/055/L | 50 | 65 | 150 | 163 | 325 | 20 | 38 | 80 | 115 | 211 | 63 | 10 | 541 | 101 | 224 | 150 | 35 | 202 | 184 | 150 | 14 |
| SRU4/079/L | 65 | 80 | 150 | 163 | 325 | 20 | 38 | 80 | 115 | 211 | 63 | 10 | 558 | 110 | 224 | 150 | 35 | 202 | 184 | 150 | 14 |
| SRU5/116/L | 65 | 80 | 175 | 195 | 382 | 22 | 45 | 110 | 135 | 255 | 70 | 14 | 629 | 96.5 | 279 | 180 | 35 | 240 | 210 | 180 | 14 |
| SRU5/168/L | 80 | 100 | 175 | 195 | 382 | 22 | 45 | 110 | 135 | 255 | 70 | 14 | 652 | 108 | 279 | 180 | 35 | 240 | 210 | 180 | 14 |
| SRU6/260/L | 100 | - | 190 | 225 | 436 | 22 | 48 | 110 | 155 | 295 | 70 | 14 | 748 | 124 | 267 | 260 | 20 | 300 | 220 | 190 | 14 |
| SRU6/353/L | 100 | 150 | 190 | 225 | 436 | 22 | 48 | 110 | 155 | 295 | 70 | 14 | 778 | 139.5 | 267 | 260 | 20 | 300 | 220 | 190 | 14 |

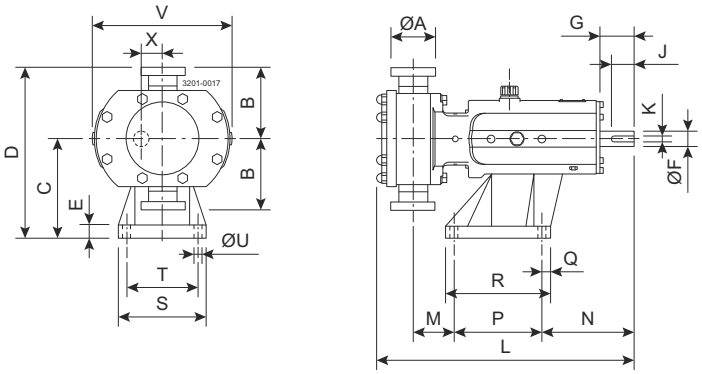


**Figure 2. Vertically ported**

A1 — denotes hygienic port dimension

A2 — denotes enlarged port dimension

| PUMP | A1 | A2 | B | C | D | E | F | G | J | K | L | M | N | P | Q | R | S | T | U | V | X |
|---|---|---|---|---|---|---|---|---|---|---|---|---|---|---|---|---|---|---|---|---|---|
| SRU1/005/H | 25 | - | 95 | 113 | 208 | 15 | 16 | 40 | 30 | 5 | 284 | 49 | 117 | 80 | 22 | 114 | 104 | 80 | 10 | 174 | 22.5 |
| SRU1/008/H | 25 | 40 | 95 | 113 | 208 | 15 | 16 | 40 | 30 | 5 | 294 | 55 | 117 | 80 | 22 | 114 | 104 | 80 | 10 | 174 | 22.5 |

| PUMP | A1 | A2 | B | C | D | E | F | G | J | K | L | M | N | P | Q | R | S | T | U | V | X |
|---|---|---|---|---|---|---|---|---|---|---|---|---|---|---|---|---|---|---|---|---|---|
| SRU2/013/H | 25 | 40 | 105 | 147 | 252 | 16 | 22 | 50 | 32 | 6 | 339 | 67 | 124 | 100 | 12 | 124 | 124 | 100 | 12 | 213 | 30 |
| SRU2/018/H | 40 | 50 | 105 | 147 | 252 | 16 | 22 | 50 | 32 | 6 | 349 | 70.5 | 124 | 100 | 12 | 124 | 124 | 100 | 12 | 213 | 30 |
| SRU3/027/H | 40 | 50 | 125 | 175 | 300 | 22 | 28 | 60 | 40 | 8 | 439 | 67.5 | 161 | 155 | 15 | 185 | 155 | 125 | 14 | 246 | 37.5 |
| SRU3/038/H | 50 | 65 | 125 | 175 | 300 | 22 | 28 | 60 | 40 | 8 | 452 | 72 | 161 | 155 | 15 | 185 | 155 | 125 | 14 | 246 | 37.5 |
| SRU4/055/H | 50 | 65 | 150 | 213 | 363 | 25 | 38 | 80 | 63 | 10 | 541 | 78 | 197 | 200 | 17 | 234 | 184 | 150 | 14 | 301 | 48 |
| SRU4/079/H | 65 | 80 | 150 | 213 | 363 | 25 | 38 | 80 | 63 | 10 | 558 | 87 | 197 | 200 | 17 | 234 | 184 | 150 | 14 | 301 | 48 |
| SRU5/116/H | 65 | 80 | 175 | 257 | 432 | 27 | 45 | 110 | 70 | 14 | 629 | 91.5 | 264 | 200 | 20 | 240 | 220 | 180 | 14 | 351 | 60 |
| SRU5/168/H | 80 | 100 | 175 | 257 | 432 | 27 | 45 | 110 | 70 | 14 | 652 | 103 | 264 | 200 | 20 | 240 | 220 | 180 | 14 | 351 | 60 |
| SRU6/260/H | 100 | - | 190 | 295 | 485 | 27 | 48 | 110 | 70 | 14 | 748 | 124 | 267 | 260 | 20 | 300 | 250 | 210 | 14 | 400 | 70 |
| SRU6/353/H | 100 | 150 | 190 | 295 | 485 | 27 | 48 | 110 | 70 | 14 | 778 | 139.5 | 267 | 260 | 20 | 300 | 250 | 210 | 14 | 400 | 70 |

Authorized Distributor

This document and its contents are subject to copyrights and other intellectual property rights owned by Alfa Laval Corporate AB. No part of this document may be copied, re-produced or transmitted in any form or by any means, or for any purpose, without Alfa Laval Corporate AB's prior express written permission. Information and services provided in this document are made as a benefit and service to the user, and no representations or warranties are made about the accuracy or suitability of this information and these services for any purpose. All rights are reserved.

200006100-2-EN-GB

© Alfa Laval Corporate AB

**How to contact Alfa Laval**

Up-to-date Alfa Laval contact details for all countries are always available on our website at www.alfalaval.com