Alfa Laval LKH

Centrifugal Pumps

Introduction

The Alfa Laval LKH Centrifugal Pump is a premium pump for use in hygienic applications. To increase process productivity, it is distinguished by high efficiency, gentle product treatment, chemical resistance, and a wide range of flow rates, pressures and options.

Precision-engineered, the LKH pump delivers greater energy efficiency than similar pumps. Its optimized design, premium motor, tight tolerances and advanced impeller design minimize recirculation and reduce energy consumption.

Application

Designed for Cleaning-in-Place (CIP), the Alfa Laval LKH is ideal for hygienic applications within the dairy, food, beverage and personal care industries that require gentle product treatment and reliable operation.

The LKH pump is available in 13 sizes to handle capacities up to 500 m3/hour and differential pressures up to 11 bar at 50 Hz.

Benefits

- Energy efficient: superior efficiency resulting in reduced energy consumption and CO2 footprint.
- Hygienic: designed according to the most stringent hygienic design standards and with verified, effective CIP cleanability.
- Wide performance envelope: reduce need for parallel and serial pump installations and ensure pump operating with high efficiency.
- Maximized uptime and reduced maintenance costs: robust mechanical design and ease of maintenance with modular front-loading seals.

Standard design

All media contacting steel components like pump casing, impeller, impeller nut and backplate are in W. 1.4404 (AISI 316L). A stainless steel shroud protects the motor and four adjustable stainless steel legs support the complete unit.

A compression coupling securely attaches the stub shaft to the motor shaft with precision alignment, and the semi-open impeller with a special vane design ensures efficient and gentle handling of the product as it moves through the pump.

As standard, the LKH pump is equipped with a single mechanical shaft seal but is also available with a single flushed or a double mechanical shaft seal. The front-loading shaft seal, with the spring and washers mounted on the atmospheric side, makes maintenance fast, easy and inexpensive. It takes just a few minutes to replace the shaft seal. In addition, the balanced design minimizes the risk of seal opening during unforeseen pressure shock.

TECHNICAL DATA

Materials	
Product wetted steel parts:	W. 1.4404 (316L)
Other steel parts:	Stainless steel
Inside surface finish:	Standard blasted
Product wetted elastomers:	EPDM
Rotary seal face:	Carbon
Stationary seal face:	Silicon Carbide

Motor
Foot-flanged motor according to the IEC metric standard, 2 poles = 3000/3600 rpm at 50/60 Hz, 4 poles = 1500/1800 rpm at 50/60 Hz, IP 55 (with drain hole with labyrinth plug), insulation class F.

Motor sizes	
50Hz:	0.75 - 110 kW
60Hz:	0.75 - 110 kW

Min/max motor speed	
2 poles: 0.75 - 45 kW:	900 - 4000 rpm
2 poles: 55 - 110 kW:	900 - 3600 rpm
4 poles: 0.75 - 75 kW:	900 - 2200 rpm

Warranty
Extended 3-years warranty on LKH pumps. The warranty covers all non wear parts on the condition that genuine Alfa Laval Spare Parts are used.

OPERATING DATA

Max inlet pressure	
LKH-5:	600 kPa (6 bar)
LKH-10 - 70:	1000kPa (10 bar)
LKH-70, 60Hz:	500kPa (5 bar)
LKH-85 - 90:	500kPa (5 bar)

Temperature	
Temperature range:	-10°C to +140°C (EPDM)
Flush media:	Max 70°C
Flush housing sterilization (pump not in operation):	Max 125°C

Flushed shaft seal	
Water pressure inlet:	Max. 1 bar
Water consumption:	0.25 - 0.5 l/min

Double mechanical shaft seal	
Water pressure inlet, LKH-5 to -60:	Max. 500 kPa (5 bar)
Water pressure inlet, LKH-70 to -90:	Max. 300 kPa (3 bar)
Water consumption:	0.25 - 0.5 l/min

Connections for flushed and double mechanical shaft seal	
LKH-5 - 70, LKH-90:	1/8" G
LKH-85:	Ø6 tube

Dimensions

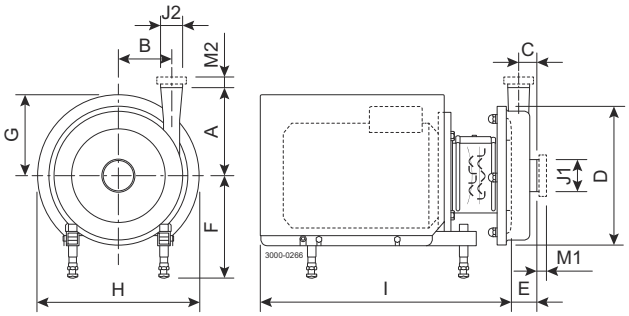

Pump specific measures (mm)

Pump Model	LKH-5	LKH-10	LKH-15	LKH-20	LKH-25	LKH-35	LKH-40	LKH-45	LKH-50	LKH-60	LKH-70	LKH-85	LKH-90
A	158	142	166	180	193	193	212	193	205	261	254	229	310
B	70	87	66	88	106	119	126	97	118	102	147	220	250
C	22	23	43	27	32	23	28	41	35	62	25	65	65
D	189	247	247	253	303	303	329	329	329	329	408	438	504
E	42	51	87	63	69	54	64	64	77	106	76	97	95

Motor specific measures (mm)

Motor IEC	IEC80	IEC90	IEC100	IEC112	IEC132	IEC160	IEC180	IEC200	IEC250	IEC280
Motor kW	0.75/1.1	1.5/2.2	3.0	4.0	5.5/7.5	11/15/18.5	22	30/37/45	55/75	90/110
F(max) [1]	262	262	282	285	304	332	352	372	446	496
G	125	157	185	198	196	262	286	399	394	584
H	250	288	325	359	383	485	533	670	738	960
I (LKH-5)	400	441	-	-	-	-	-	-	-	-
I (LKH-10 to -60)	-	434	516	497	597	791	842	980	-	-
I (LKH-70 to -90)	-	-	-	-	-	804	855	993	1051	1271

[1] Possible to reduce dimension F by min. 59 mm for all pump models. For smaller models it will be possible to reduce dimension F even further.

Motor overview

Pump Model	LKH-5	LKH-10	LKH-15	LKH-20	LKH-25	LKH-35	LKH-40	LKH-45	LKH-50	LKH-60	LKH-70	LKH-85	LKH-90
Motor range (IEC)	IEC80-IEC90	IEC90-IEC160	IEC90-IEC160	IEC90-IEC160	IEC90-IEC200	IEC90-IEC180	IEC90-IEC200	IEC100-IEC180	IEC100-IEC200	IEC112-IEC200	IEC160-IEC250	IEC200-IEC280	IEC180-IEC250

From LKH-5 to LKH-85 dimensional data are based on 2 pole, ABB motors.
For LKH-90 dimensional data are based on 4 pole, ABB motors.

Connections (mm)

Pump Model		LKH-5	LKH-10 LKH-20 LKH-35	LKH-15 LKH-45 LKH-50 LKH-70	LKH-25	LKH-40	LKH-60	LKH-85 LKH-90
Clamp ISO 2037	M1	21	21	21	21	21	21	-
	M2	21	21	21	21	12	21	-
Union ISO(IDF)	M1	21	21	21	21	21	21	-
	M2	21	21	21	21	21	21	-
Union DIN/ISO	M1	22	25	30	30	30	30	-
	M2	22	22	30	25	27	30	-
Union SMS	M1	20	24	35	24	24	35	-
	M2	20	20	24	24	24	35	-
Union (BS)RJT	M1	27	27	32	27	27	32	-
	M2	27	27	27	27	22	32	-
Union DS	M1	20	24	24	24	24	24	-
	M2	20	20	24	24	21	24	-
Union DIN/DIN	M1	22	25	30	30	30	30	50
	M2	22	22	30	25	27	30	50
Clamp ASME BPE	M1	-	-	-	-	-	-	38
	M2	-	-	-	-	-	-	38
J1 [1]		51 / 2"	63,5 / 2,5"	101,6 / 4"	76,1 / 3"	76,1 / 3"	101,6 / 4"	152,5 / 6"
J2 [2]		38 / 1,5"	51 / 2"	76,1 / 3"	63,5 / 2,5"	63,5 / 2,5"	101,6 / 4"	152,5 / 6"

[1] Other dimensions available on request.

[2] Other dimensions available on request. ESE00263/7

Flow chart

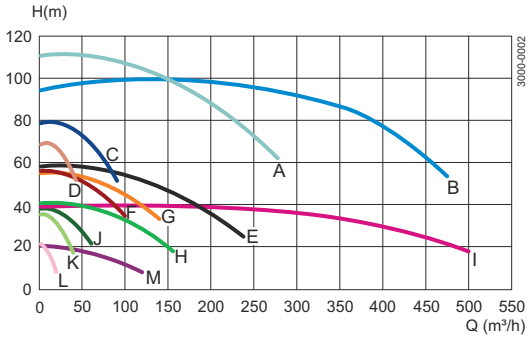

A = LKH-70 D = LKH-35 G = LKH-50 J = LKH-20 M = LKH-15
B = LKH-85 E = LKH-60 H = LKH-45 K = LKH-10
C = LKH-40 F = LKH-25 I = LKH-90 L = LKH-5

Frequency: 50 Hz Speed (synchr): 3000 rpm

Options

- Impeller with reduced diameter.
- Flushed shaft seal.
- Double mechanical shaft seal.
- Rotating seal face of Silicon Carbide.
- Product wetted elastomers NBR, FPM or FEP.
- ½" vertical drain connection.
- Product wetted surface finish mechanically polished to Ra ≤ 0.8 µm.
- Surface finish measurement with certificate (Ra ≤ 0.8 µm).
- Inducer (LKH-10 to -50).
- Adjustable pads.
- Motor for other voltage and/or frequency.
- Half speed motor.
- Motor with increased safety/flame proof motor.
- ATEX approved execution (LKHex).

Ordering

Please state the following when ordering:

- Pump size.
- Connections.
- Impeller diameter.
- Motor size.
- Voltage and frequency.
- Flow, pressure and temperature.
- Density and viscosity of the product.
- Options.

Note! For further details, see also ESE00698.

Authorized Distributor

This document and its contents are subject to copyrights and other intellectual property rights owned by Alfa Laval Corporate AB. No part of this document may be copied, re-produced or transmitted in any form or by any means, or for any purpose, without Alfa Laval Corporate AB's prior express written permission. Information and services provided in this document are made as a benefit and service to the user, and no representations or warranties are made about the accuracy or suitability of this information and these services for any purpose. All rights are reserved.

© Alfa Laval Corporate AB

How to contact Alfa Laval

Up-to-date Alfa Laval contact details for all countries are always available on our website at www.alfalaval.com