Alfa Laval LKHPF

Centrifugal pumps

Introduction

The Alfa Laval LKHPF Centrifugal Pump for High Inlet Pressure is a high-pressure, high-efficiency centrifugal pump suited for high-pressure filtration applications. To increase process productivity, it is distinguished by high efficiency, low energy consumption, gentle product treatment, chemical resistance, and a wide range of flow rates, pressures and options.

Precision-engineered, the LKHP Filtration pump delivers greater energy efficiency than similar premium pumps. Its optimized design, premium motor, tight tolerances and advanced impeller design minimize recirculation and reduce energy consumption.

Applications

Designed for inlet pressures up to 40 bar and for Cleaning-in-Place (CIP), the Alfa Laval LKHPF pump is ideal for use in filtration systems across the food, beverage, home-personal care, biotechnology and pharmaceutical industries. Tough under pressure, the LKHPF is ideal for demanding nanofiltration and reverse osmosis filtration installations.

The LKHPF pump is available in nine sizes to handle capacities up to 280 m3/h and differential pressures up to 11 bar at 50 Hz.

Benefits

- Energy efficient: superior efficiency resulting in reduced energy consumption and CO2 footprint.
- Hygienic: designed according to the most stringent hygienic design standards and with verified, effective CIP cleanability.
- Wide performance envelope: reduce need for parallel and serial pump installations and ensure pump operating with high efficiency.
- High inlet pressure: designed for inlet pressures up to 40 bar and can therefore be used in the most demanding applications within filtration.

Standard design

All media contacting steel components like pump casing, impeller, impeller nut and backplate are in W. 1.4404 (AISI 316L). A stainless steel shroud protects the motor and four adjustable stainless steel legs support the complete unit.

A compression coupling securely attaches the stub shaft to the motor shaft with precision alignment, and the semi-open impeller with a special vane design ensures efficient and gentle handling of the product as it moves through the pump.

As standard, the LKHPF pump is equipped with an internal single mechanical shaft seal but is also available with a flushed shaft seal. The secondary seal of the flushed seal is a long-lasting lip seal. The front-loading shaft seal makes maintenance fast, easy and inexpensive. It takes just a few minutes to replace the shaft seal. In addition, the balanced design minimizes the risk of seal opening during unforeseen pressure shock.

With heavy-duty pump casing and backplate, high-pressure internal seals and multiple heavy-duty studs, the pump is capable of handling very high inlet pressures.

TECHNICAL DATA

Materials	
Product wetted steel parts:	W. 1.4404 (316L)
Other steel parts:	Stainless steel
Inside surface finish:	Standard blasted
Product wetted elastomers:	EPDM
Rotary seal face:	Silicon Carbide
Stationary seal face:	Silicon Carbide

Motor
Foot-flanged motor according to the IEC metric standard, 2 poles = 3000/3600 rpm at 50/60 Hz, IP 55 (with drain hole with labyrinth plug), insulation class F.

Motor sizes	
50Hz:	2.2 - 75 kW
60Hz:	2.5 - 80 kW

Min/max motor speed	
2 poles: 2.2 - 45 kW:	900 - 4000 rpm
2 poles: 55 - 75 kW:	900 - 3600 rpm

Warranty
Extended 3-years warranty on LKHPF pumps. The warranty covers all non wear parts on the condition that genuine Alfa Laval Spare Parts are used.

OPERATING DATA

Max inlet pressure	
LKHPF 10 - 70:	4000kPa (40 bar)

Temperature	
Temperature range:	-10°C to +140°C (EPDM)
Flush media:	Max 70°C

Flushed shaft seal	
Water pressure inlet:	Max. 1 bar
Water consumption:	0.25 - 0.5 l/min

Connections for flushed and double mechanical shaft seal	
LKHPF 10 - 70:	1/8" G

Dimensions (mm)

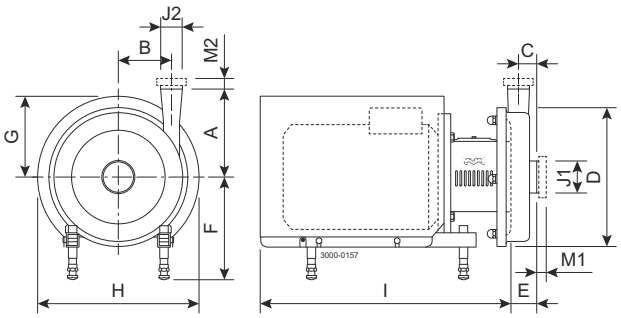

Pump specific measures

Pump Model	LKHPF-10	LKHPF-20	LKHPF-25	LKHPF-35	LKHPF-40	LKHPF-45	LKHPF-50	LKHPF-60	LKHPF-70
A	142	180	193	193	212	193	205	262	254
B	87	87	106	119	126	97	118	102	147
C	29	43	38	28	34	43	42	42	28
D	247	253	303	303	329	303	329	329	408
E	64	78	82	66	77	93	91	93	93

Motor specific measures

Motor IEC	IEC90	IEC112	IEC132	IEC160	IEC180	IEC200	IEC250
Motor kW	1.5/2.2	4.0	5.5/7.5	11/15/18.5	22	30/37/45	55/75
F(max) [1]	262	285	304	332	352	372	446
G	157	198	196	262	286	399	394
H	288	359	383	485	533	670	738
I (LKHPF-10 to -60)	434	497	597	791	842	980	-
I (LKHPF-70)	-	-	-	804	855	993	1051

[1] Possible to reduce dimension F by min. 59 mm for all pump models. For smaller models it will be possible to reduce dimension F even further.

Motor overview

Pump Model	LKHPF-10	LKHPF-20	LKHPF-25	LKHPF-35	LKHPF-40	LKHPF-45	LKHPF-50	LKHPF-60	LKHPF-70
Motor range (IEC)	IEC90-IEC112	IEC90-IEC132	IEC132-IEC160	IEC112-IEC160	IEC132-IEC180	IEC112-IEC160	IEC132-IEC180	IEC132-IEC200	IEC180-IEC250

Note! Dimensional data are based on 2 pole, ABB motors.

Connections

Pump Model		LKHPF-10 LKHPF-20 LKHPF-35	LKHPF-25	LKHPF-40	LKHPF-45 LKHPF-50 LKHPF-70	LKHPF-60
Clamp (Heavy Duty)	M1	29	29	29	29	29
	M2	29	29	12	29	29
Flange EN 1092-1 Type 11	M1	56	56	56	65	65
	M2	48	56	56	56	65
J1 [1]		63.5 / 2.5"	76.1 / 3"	76.1 / 3"	101.6 / 4"	101,6 / 4"
J2 [1]		51 / 2"	63,5 / 2.5"	63.5 / 2.5"	76.1 / 3"	101,6 / 4"

[1] Other dimensions available on request.

Flow chart

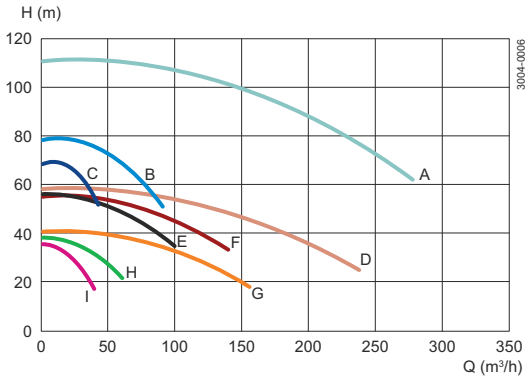

A = LKHPF - 70
B = LKHPF - 40
C = LKHPF - 35
D = LKHPF - 60
E = LKHPF - 25
F = LKHPF - 50
G = LKHPF - 45
H = LKHPF - 20
I = LKHPF - 10

Figure 1. Frequency: 50 Hz, Speed (Synchr.): 3000 rpm

Options

- Impeller with reduced diameter.
- Flushed shaft seal.
- Product wetted elastomers NBR or FEP.
- Product wetted surface finish mechanically polished to Ra ≤ 0.8 µm.
- Surface finish measurement with certificate (Ra ≤ 0.8 µm).
- Adjustable pads.
- Motor for other voltage and/or frequency.

Ordering

Please state the following when ordering:

- Pump size.
- Connections.

- Impeller diameter.
- Motor size.
- Voltage and frequency.
- Flow, pressure and temperature.
- Density and viscosity of the product.
- Options.

Note!

- The curves for LKHPF are identical to those for LKH.
- For further details, see also ESE01950.

This document and its contents are subject to copyrights and other intellectual property rights owned by Alfa Laval Corporate AB. No part of this document may be copied, re-produced or transmitted in any form or by any means, or for any purpose, without Alfa Laval Corporate AB's prior express written permission. Information and services provided in this document are made as a benefit and service to the user, and no representations or warranties are made about the accuracy or suitability of this information and these services for any purpose. All rights are reserved.

200006091-1-EN-GB

© Alfa Laval Corporate AB

How to contact Alfa Laval

Up-to-date Alfa Laval contact details for all countries are always available on our website at www.alfalaval.com