Alfa Laval LKHI

Centrifugal pumps

Introduction

The Alfa Laval LKHI Centrifugal Pump for 16 bar Inlet Pressure is a is a premium pump for use in hygienic applications with inlet pressures up to 16 bar. To increase process productivity, it is distinguished by high efficiency, gentle product treatment, chemical resistance, and a wide range of flow rates, pressures and options.

Precision-engineered, the LKHI pump delivers greater energy efficiency than similar premium pumps. Its optimized design, premium motor, tight tolerances and advanced impeller design minimize recirculation and reduce energy consumption.

Applications

Designed for inlet pressures up to 16 bar and for Cleaning-in-Place (CIP), the Alfa Laval LKHI is ideal for higher pressure hygienic applications within the dairy, food, beverage and personal care industries that require gentle product treatment and reliable operation.

The LKHI pump is available in nine sizes to handle capacities up to 240 m3/h and provide differential pressures up to 8 bar at 50 Hz.

Benefits

- Energy efficient: superior efficiency resulting in reduced energy consumption and CO2 footprint.
- Hygienic: designed according to the most stringent hygienic design standards and with verified effective CIP cleanability.
- Wide performance envelope: reduce need for parallel and serial pump installations and ensure pump operating with high efficiency.
- High inlet pressure: designed for inlet pressures up to 16 bar and can therefore be used in systems with higher pressure rating.

Standard design

All media contacting steel components like pump casing, impeller, impeller nut and backplate are in W. 1.4404 (AISI 316L). A stainless steel shroud protects the motor and four adjustable stainless steel legs support the complete unit.

A compression coupling securely attaches the stub shaft to the motor shaft with precision alignment, and the semi-open

impeller with a special vane design ensures efficient and gentle handling of the product as it moves through the pump.

As standard, the LKHI pump is equipped with an internal single mechanical shaft seal but is also available with a flushed shaft seal. The secondary seal of the flushed seal is a long-lasting lip seal. The front-loading shaft seal makes maintenance fast, easy and inexpensive. It takes just a few minutes to replace the shaft seal. In addition, the balanced design minimizes the risk of seal opening during unforeseen pressure shock.

TECHNICAL DATA

Materials	
Product wetted steel parts:	W. 1.4404 (316L)
Other steel parts:	Stainless steel
Inside surface finish:	Standard blasted
Product wetted elastomers:	EPDM
Rotary seal face:	Carbon
Stationary seal face:	Silicon Carbide

Motor
Foot-flanged motor according to the IEC metric standard, 2 poles = 3000/3600 rpm at 50/60 Hz, IP 55 (with drain hole with labyrinth plug), insulation class. F.

Motor sizes	
50Hz:	1.5 - 30 kW
60Hz:	1.2 - 34 kW

Min/max motor speed	
2 poles: 1.5 - 30 kW:	900 - 4000 rpm

Warranty
Extended 3-years warranty on LKHI pumps. The warranty covers all non wear parts on the condition that genuine Alfa Laval Spare Parts are used.

OPERATING DATA

Max inlet pressure	
LKHI 10 - 60:	1600kPa (16 bar)

Temperature	
Temperature range:	-10°C to +140°C (EPDM)
Flush media:	Max 70°C

Flushed shaft seal	
Water pressure inlet:	Max. 1 bar
Water consumption:	0.25 - 0.5 l/min

Connections for flushed mechanical shaft seal	
LKHI 10 - 60:	1/8" G

Dimensions (mm)

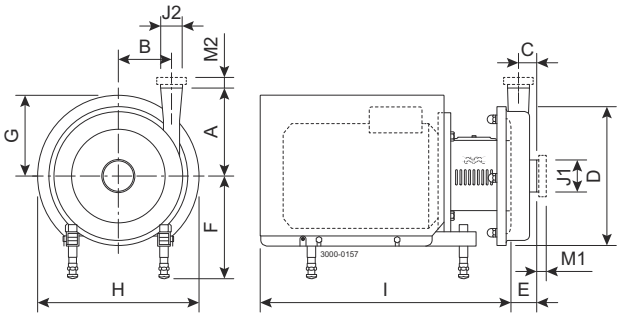

Pump specific measures

Pump Model	LKHI-10	LKHI-15	LKHI-20	LKHI-25	LKHI-35	LKHI-40	LKHI-45	LKHI-50	LKHI-60
A	142	166	180	193	193	212	212	205	261
B	87	66	88	106	119	126	126	118	102
C	23	43	27	32	23	28	28	35	62
D	247	247	253	303	303	329	329	329	329
E	51	87	63	69	54	64	64	77	106

Moter specific measures

Motor IEC	IEC90	IEC100	IEC112	IEC132	IEC160	IEC180	IEC200
Motor kW	1.5/2.2	3.0	4.0	5.5/7.5	11/15/18.5	22	30
F(max) [1]	262	282	285	304	332	352	372
G	157	185	198	196	262	286	399
H	288	325	359	383	485	533	670
I	434	516	497	597	791	842	980

[1] Possible to reduce dimension F by min. 59 mm for all pump models. For smaller models it will be possible to reduce dimension F even further.

Motor overview

Pump Model	LKHI-10	LKHI-15	LKHI-20	LKHI-25	LKHI-35	LKHI-40	LKHI-45	LKHI-50	LKHI-60
Motor range (IEC)	IEC90-IEC112	IEC100-IEC132	IEC90-IEC132	IEC132-IEC160	IEC112-IEC160	IEC132-IEC180	IEC112-IEC160	IEC132-IEC180	IEC132-IEC200

Note! Dimensional data are based on 2 pole, ABB motors.

Connections

Pump Model		LKHI-10 LKHI-20 LKHI-35	LKHI-15 LKHI-45 LKHI-50	LKHI-25	LKHI-40	LKHI-60
Clamp ISO 2037	M1	21	21	21	21	21
	M2	21	21	21	12	21
Union ISO(IDF)	M1	21	21	21	21	21
	M2	21	21	21	21	21
Union DIN/ISO	M1	25	30	30	30	30
	M2	22	30	25	27	30
Union SMS	M1	24	35	24	24	35
	M2	20	24	24	24	35
Union (BS)RJT	M1	27	32	27	27	32
	M2	27	27	27	22	32
Union DS	M1	24	24	24	24	24
	M2	20	24	24	21	24
J1*		63.5 / 2.5"	101.6 / 4"	76.1 / 3"	76.1 / 3"	101.6 / 4"
J2*		51 / 2"	76.1 / 3"	63.5 / 2.5"	63.5 / 2.5"	101.6 / 4"

***Note!** Other dimensions available on request.ESE00268/9

Flow chart

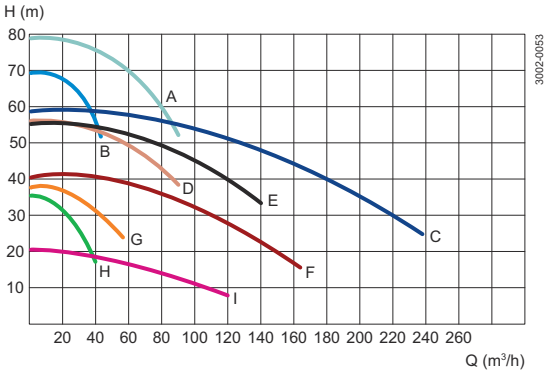

A = LKHI - 40
B = LKHI - 35
C = LKHI - 60
D = LKHI - 25
E = LKHI - 50
F = LKHI - 45
G = LKHI - 20
H = LKHI - 10
I = LKHI - 15

Options

- Impeller with reduced diameter.
- Flushed shaft seal.
- Rotating seal face of Silicon Carbide.
- Product wetted elastomers NBR or FPM.
- Product wetted surface finish mechanically polished to Ra ≤ 0.8 µm.
- Surface finish measurement with certificate (Ra ≤ 0.8 µm).

- Adjustable pads.
- Motor for other voltage and/or frequency.

Ordering

Please state the following when ordering:

- Pump size.
- Pressure.
- Connections.
- Impeller diameter.
- Motor size.
- Single or flushed shaft seal.
- Optional extras.

Note! The curves for LKHI are the same as those for LKH.- For further details, see also Instruction Manual, ESE00700.

Authorized Distributor

This document and its contents are subject to copyrights and other intellectual property rights owned by Alfa Laval Corporate AB. No part of this document may be copied, re-produced or transmitted in any form or by any means, or for any purpose, without Alfa Laval Corporate AB's prior express written permission. Information and services provided in this document are made as a benefit and service to the user, and no representations or warranties are made about the accuracy or suitability of this information and these services for any purpose. All rights are reserved.

200006090-1-EN-GB

© Alfa Laval Corporate AB

How to contact Alfa Laval

Up-to-date Alfa Laval contact details for all countries are always available on our website at www.alfalaval.com