Alfa Laval LKH Prime

Centrifugal pumps

Introduction

Based on the market-leading Alfa Laval LKH pump, the Alfa Laval LKH Prime Centrifugal Pump is a versatile, highly efficient self-priming pump for use in hygienic applications, especially tank emptying and CIP return applications. With its combination of air-screw technology and advanced design, the pump can remove air from the suction pipe.

Precision-engineered, the LKH Prime delivers greater energy efficiency than similar pumps. Its optimized design, premium motor, tight tolerances and advanced impeller and airscrew design minimize recirculation and reduce energy consumption.

Application

The LKH Prime pump is designed to meet the stringent hygienic requirements across the food, dairy, beverage, and home-personal care industries. It is ideal for tank emptying and CIP return applications. With verified and effective CIP cleanability, the LKH Prime can be used as a product pump as well.

The LKH Prime is available in three sizes to handle capacities up to 100 m3/h and differential pressures up to 7.5 bar at 50 Hz.

Benefits

- Energy efficient: superior efficiency resulting in reduced energy consumption and CO2 footprint.
- Hygienic: designed according to the most stringent hygienic design standards and with verified and effective CIP cleanability.
- Quiet: operates very quietly compared to other self-priming pumps improving the working environment.
- Reduced capital investment: designed for Cleaning-in-Place (CIP) duties containing entrained air but can also pump product reducing need for additional pump.

Standard design

All media contacting steel components like pump casing, impeller, airscrew, front cover, recirculation pipe and backplate are in W. 1.4404 (AISI 316L). A stainless steel shroud protects the motor and four adjustable stainless steel legs support the complete unit.

A compression coupling securely attaches the stub shaft to the motor shaft with precision alignment, and the semi-open impeller with a special vane design ensures efficient handling of the product as it moves through the pump.

As standard, the LKH prime pump is equipped with a single mechanical shaft seal but is also available with a double mechanical shaft seal. The front-loading shaft seal, with the spring and washers mounted on the atmospheric side, makes maintenance fast, easy and inexpensive. It takes just a few minutes to replace the shaft seal. In addition, the balanced design minimizes the risk of seal opening during unforeseen pressure shock.

Working principle

On applications where the pumped media contains a mixture of air and liquid in the suction line, airscrew rotation causes the formation of a continuous liquid ring within the canister. Due to the eccentric position of the canister relative to the airscrew, an air chamber forms between the liquid ring and the airscrew, which separates into air pockets between the air-screw vanes.

The continuous rotation of the air-screw forces air pockets through the canister into the suction stage of the impeller which are then pumped out via the discharge.

Liquid is returned from the discharge via the recirculation pipe into the canister to ensure the liquid ring is maintained at all times. When there is no air present, the canister and recirculation loop have no function and are fully filled with liquid. The liquid passes through the canister into the suction stage of the impeller, allowing the pump to act as a traditional centrifugal pump.

Certificates

Authorized to carry the 3A symbol

TECHNICAL DATA

Materials	
Product wetted steel parts:	W. 1.4404 (316L)
Other steel parts:	Stainless steel
Inside surface finish:	Standard blasted
Product wetted elastomers:	EPDM
Rotary seal face:	Carbon
Stationary seal face:	Silicon Carbide

Motor
Foot-flanged motor according to the IEC metric standard, 2 poles = 3000/3600 rpm at 50/60 Hz, IP 55 (with drain hole with labyrinth plug), insulation class F.

Motor sizes	
50Hz:	1.5 - 45 kW
60Hz:	1.8 - 45 kW

Min/max motor speed	
Air evacuation:	2800 - 3600 rpm
Pumping product (no air):	900 - 3600 rpm

Warranty
Extended 3-years warranty on LKH Prime pumps. The warranty covers all non wear parts on the condition that genuine Alfa Laval Spare Parts are used.

OPERATING DATA

Max. inlet pressure	
LKH Prime 10 - 40:	500 kPa (5 bar)

Air release time	
LKH Prime 10 - 40:	Max. 15 min.

Temperature	
Temperature range:	-10 °C to +140 °C (EPDM)
Flush media:	Max. 70 °C

Double mechanical shaft seal	
Water pressure inlet, LKH Prime 10 - 40:	Max. 500 kPa (5 bar)
Water consumption:	0.25 - 0.5 l/min

Connections for flushed and double mechanical shaft seal	
LKH Prime 10 - 40:	1/8" G

Dimensions (mm)

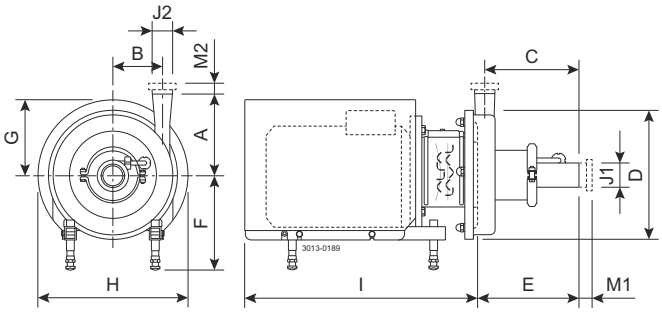

Pump specific measures

Pump Model	LKH Prime 10	LKH Prime 20	LKH Prime 40
A	174	187	259
B	85	92	126
C	222	248	271
D	247	253	329
E	245	280	301

Motor specific measures

Motor IEC	IEC90	IEC100	IEC112	IEC132	IEC160	IEC180	IEC200
Motor kW	**1.5/2.2**	**3.0**	**4.0**	**5.5/7.5**	**11-18.kW**	**22**	**30/37/45**
F(max.)[1]	262	282	285	304	332	352	372
G	157	185	198	196	262	286	399
H	288	325	359	383	485	533	670
I	434	516	497	597	791	842	980

[1] Possible to reduce dimension F by min. 59 mm for all pump models. For smaller models it will be possible to reduce dimension F even further.

Motor overview

Pump Model	LKH Prime 10	LKH Prime 20	LKH Prime 40
Motor range (IEC)	IEC90-IEC132	IEC100-IEC160	IEC132-IEC200
Motor range (kW)	1.5-5.5	3.0-11	5.5-45kw

Note! Dimensional data are based on 2 pole, ABB motors.

Connections

Pump Model		LKH Prime 10	LKH Prime 20	LKH Prime 40
Clamp ISO 2037	M1	21	21	21
	M2	21	21	12
Union ISO(IDF)	M1	21	21	21
	M2	21	21	21
Union DIN/ISO	M1	22	25	30
	M2	22	22	27
Union SMS	M1	20	24	24
	M2	20	20	24
Union (BS)RJT	M1	27	27	27
	M2	27	27	22
Union DS	M1	20	24	24
	M2	20	20	21
Union DIN/DIN	M1	22	25	30
	M2	22	22	27
J1[1]		51 / 2"	63,5 / 2,5"	76,1 / 3"
J2[2]		51 / 2"	51 / 2"	63,5 / 2,5"

[1] Other dimensions available on request.ESE03123EN/2

[2] Other dimensions available on request. ESE03123EN/2

Flow chart

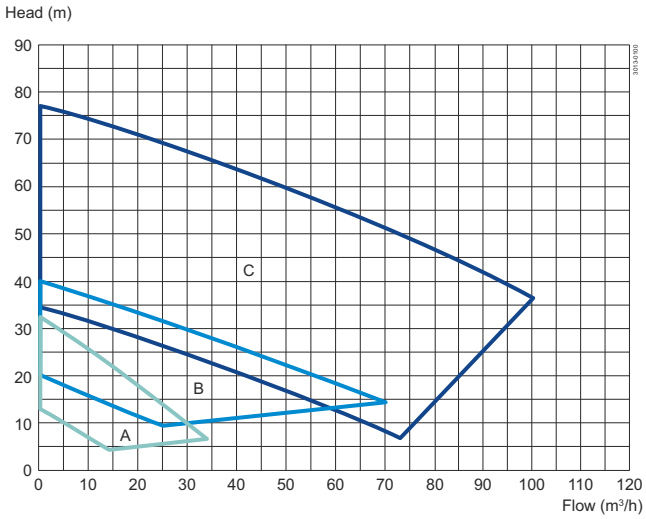

A = LKH Prime 10
B = LKH Prime 20
C = LKH Prime 40

Figure 1. Frequency: 50Hz - Speed (synchr): 3000 rpm

Options

- Impeller with reduced diameter.
- Double mechanical shaft seal.
- Rotating seal face of Silicon Carbide.
- Product wetted elastomers NBR or FPM.
- ½" vertical drain connections (two connections).
- Product wetted surface finish mechanically polished to Ra ≤ 0.8 µm.
- Adjustable pads.
- Motor for other voltage and/or frequency.
- Motor with increased safety/flame proof motor.

Ordering

Please state the following when ordering:

- Pump size.
- Connections.
- Impeller diameter.
- Motor size.
- Voltage and frequency.
- Flow, pressure and temperature.
- Density and viscosity of the product.
- Options.

Authorized Distributor

This document and its contents are subject to copyrights and other intellectual property rights owned by Alfa Laval Corporate AB. No part of this document may be copied, re-produced or transmitted in any form or by any means, or for any purpose, without Alfa Laval Corporate AB's prior express written permission. Information and services provided in this document are made as a benefit and service to the user, and no representations or warranties are made about the accuracy or suitability of this information and these services for any purpose. All rights are reserved.

© Alfa Laval Corporate AB

How to contact Alfa Laval

Up-to-date Alfa Laval contact details for all countries are always available on our website at www.alfalaval.com