Alfa Laval DuraCirc Aseptic

Circumferential Piston Pump

Introduction

The Alfa Laval DuraCirc Aseptic delivers the perfect balance of durability, reliability, high efficiency and superior hygienic performance. Combined with design features enabling simple service, the DuraCirc Aseptic keeps process running. In additional to a class leading range of flow and pressure capabilities and globally recognized hygienic certification, DuraCirc Aseptic specification allows for a sterile environment to be maintained within the pump. The innovative design also includes features that make cleaning and maintenance faster, easier and more dependable.

Applications

Designed for sterile flushing at all product media to atmosphere interfaces, as well as Cleaning-in-Place (CIP), the Alfa Laval DuraCirc Aseptic is ideal for aseptic processing within the dairy, food, beverage, home and personal care industries. The highly efficient design is particularly suited to applications that are low in viscosity with medium to high discharge pressures and require equipment that can be cleaned in place.

The DuraCirc Aseptic Circumferential Piston Pump is available with 5 different pump head displacements to handle flow rates up to 103 m3/h and differential pressures up to 25 bar.

Benefits

- Ability to introduce steam barrier on all media/atmosphere interfaces - front cover, ports and mechanical seals, allows for sterile pump operation.
- High volumetric efficiency performance allowing for optimized pump selection, reducing capital cost, whilst improving process yield.
- Certified to both EHEDG and 3A, reducing both process cross contamination risk and CIP cycle time, maintaining process yield whilst cutting cleaning costs.
- Full component interchangeability without complicated maintenance procedures, long life bearing operation and one single long-life lubricant making service faster and easier, increasing process uptime.
- Robust, durable design via strong gearcase incorporating increased diameter shafts and optimally positioned heavy-duty bearings, minimizes risk of pump head contact, reducing service requirement, maintaining process continuity.

Standard design

Twin-wing piston rotors made of special non-galling alloy are standard. All other media contacting steel components, like the rotor case, front cover and rotor nuts are in W. 1.4404 (AISI 316L). With stainless steel gear case and feet, the DuraCirc pump has an all stainless steel exterior, making it exceptional corrosion resistant.

The gearbox is as standard designed with duplex shafts and a strong, long life bearing arrangement. This provides for a very robust and rigid shaft assembly design – a prerequisite for the very high volumetric efficiency achieved.

With profiled defined compression elastomers and an optimised shaft seal location, the DuraCirc is designed according to the most stringent hygienic design standards and with verified and effective CIP cleanability.

The pump features a double mechanical seal prepared for sterile flushing. Furthermore, with special double sealing designs the pump is prepared for sterile flushing at the port connections and in the front cover.

The Alfa Laval DuraCirc Aseptic can be supplied either as a bare shaft pump or mounted on a base plate complete with

coupling, guard, gear motor and shroud for easy, plug-and-play installation.

Working principle

The rotor pistons rotate around the circumference of the channel in the pump casing. This continuously generates a partial vacuum at the suction port as the rotors unmesh, causing fluid to enter the pump. The fluid is transported around the channel by the rotor pistons, and is displaced as the rotor pistons re-mesh, generating pressure at the discharge port. The direction of flow is reversible.

Technical data

Standard specification	
Piston rotors:	Non-Galling Alloy
Other product wetted steel parts:	W. 1.4404 (316L)
Inside surface finish:	Mech Ra ≤ 0.8
Shafts:	Duplex 1.4460 (329)
Gear box:	Stainless steel
Base plate:	Stainless steel
Coupling guard:	Stainless steel
Product wetted elastomers:	EPDM
Other elastomers:	FPM
Shaft seal:	Double mechanical
Rotary seal face:	Silicon Carbide
Stationary seal face:	Silicon Carbide

Operating data	
Max flush pressure, double mechanical seal:	20 bar
Max flush pressure, port connections and front cover:	4 bar
Flush connections, shaft seal DuraCirc Aseptic 42:	BSP/G 1/8" or NPT 1/8"
Flush connections, shaft seal DuraCirc Aseptic 53-73:	BSP/G 1/4" or NPT 1/4"
Flush connections, port connections and front cover:	BSP/G 1/8" or NPT 1/8"

Temperature	
Max process and CIP temperature:	150°C

Motors
Gear motor, 4 poles, to IEC metric standard, 50/60 Hz, suitable for frequency conversion, IP55, insulation class F.

Warranty
Extended 3-years warranty on DuraCirc pumps. The warranty covers all non wear parts on the condition that genuine Alfa Laval Spare Parts are used.

Process data

Pump Model	Displacement			Inlet/Outlet		Diff. Pressure		Max speed
	Litres/rev	Imp gall/100 rev	US gall/100 rev	mm	inch	Bar	PSI	rpm
42	0,23	5.06	6.07	50	2	20	290	750
53	0,59	12.97	15.57	65	2½	25	362	750
54	0,96	21.12	25.3	80	3	16	232	750
63	1,97	43.33	52.03	100	4	25	362	600
73	2,86	62.91	75.55	150	6	25	362	600

Dimensions

(mm)

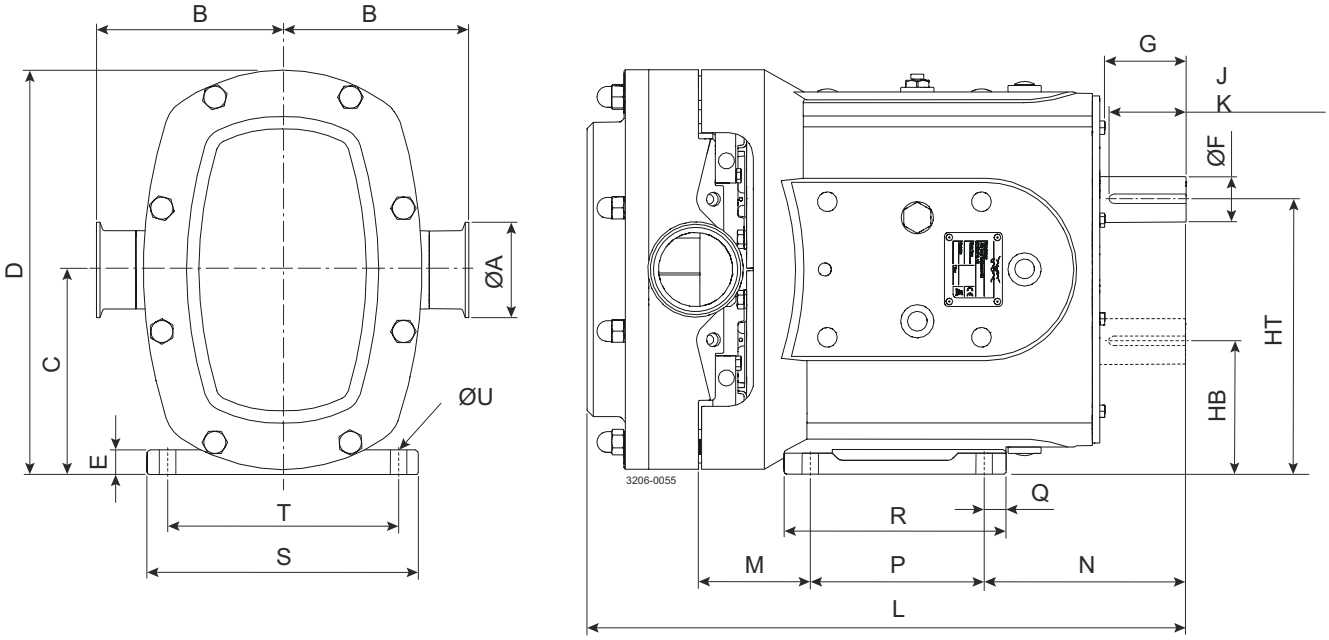

Figure1. Horizontally ported

ØU = 4 Holes

J = Key Length

K = Key Width

Pump Model	A	B	C	D	E	F	G	HB	HT	J	K	L	M	N	P	Q	R	S	T	U
42	50	125	132	262	10	28	56	88	176	40	8	414	72	139	125	16	158	185	154	14
53	65	151	163	325	17	38	66	106	220	63	10	486	90	168	140	22	180	220	190	14
54	80	159	163	325	17	38	66	106	220	63	10	513	111	168	140	22	180	220	190	14
63	100	185	200	398	21	45	85	125	275	70	14	606	125	199	160	25	223	250	216	14
73	150	203	242	480	22	60	105	153	331	90	18	725	122	246	215	20	276	280	246	14

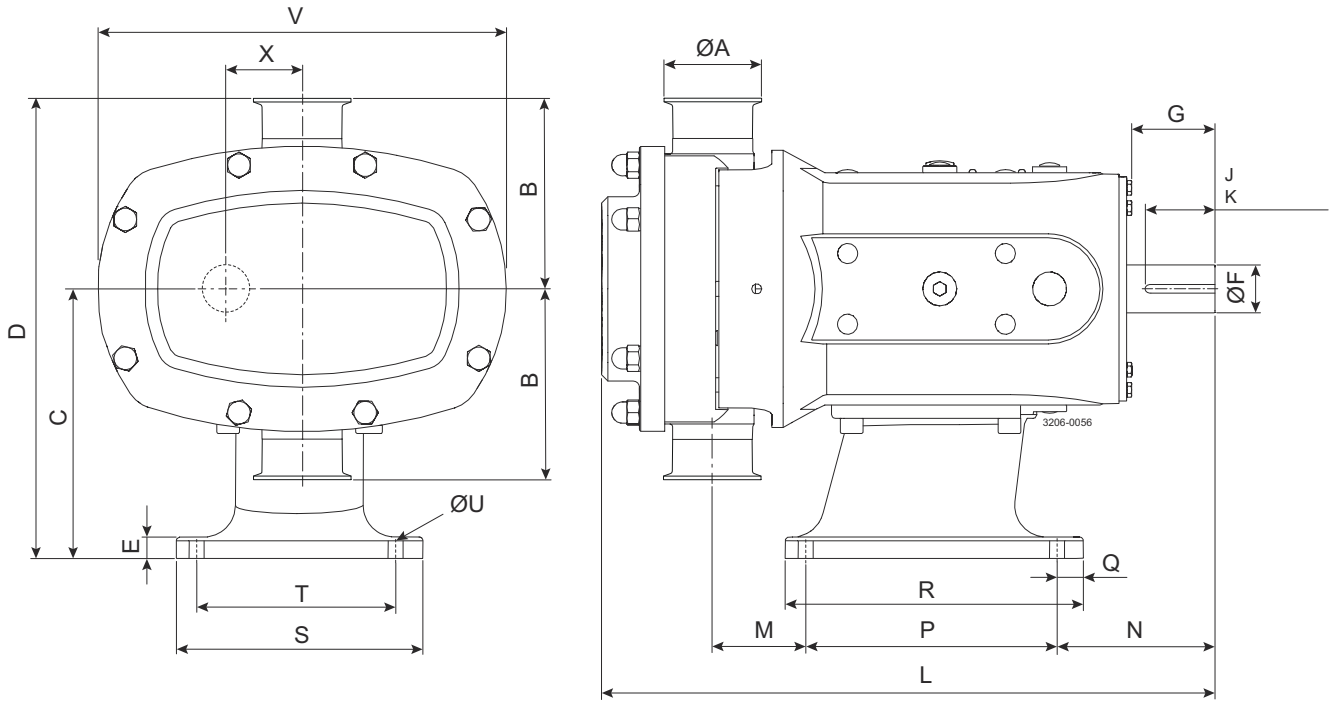

Figure2. Vertically ported

ØU = 4 Holes

J = Key Length

K = Key Width

Pump Model	A	B	C	D	E	F	G	J	K	L	M	N	P	Q	R	S	T	U	V	X
42	50	125	175	300	15	28	56	40	8	414	51	130	155	48	220	160	125	14	254	44
53	65	151	213	364	17	38	66	63	10	486	67	131	200	17	232	190	150	14	324	57
54	80	159	213	372	17	38	66	63	10	513	88	131	200	17	232	190	150	14	324	57
63	100	185	257	442	18	45	85	70	14	606	92	192	200	43	260	220	180	14	396	75
73	150	203	294	497	20	60	105	90	18	725	110	213	260	30	310	250	210	14	476	89

Options

- Product wetted elastomers in FPM
- Horizontal or vertical porting.
- Heating and cooling jacket.
- Stainless steel shroud covering coupling and motor.
- Baseplate fitted with adjustable stainless steel ball feet.

Pump sizing

In order to correctly size a circumferential piston pump some essential information is required. Provision of this information listed below enables our Technical Support personnel to obtain the optimum pump selection.

Product/Fluid Data

- Fluid to be pumped
- Viscosity
- Pumping temperature, minimum, normal and maximum
- Cleaning in Place temperature(s), minimum, normal and maximum

Performance Data

- Flow rate, minimum, normal and maximum
- Discharge head/pressure (closest to pump outlet)
- Suction condition

This document and its contents are subject to copyrights and other intellectual property rights owned by Alfa Laval Corporate AB. No part of this document may be copied, re-produced or transmitted in any form or by any means, or for any purpose, without Alfa Laval Corporate AB's prior express written permission. Information and services provided in this document are made as a benefit and service to the user, and no representations or warranties are made about the accuracy or suitability of this information and these services for any purpose. All rights are reserved.

200004106-1-EN-GB

© Alfa Laval Corporate AB

How to contact Alfa Laval

Up-to-date Alfa Laval contact details for all countries are always available on our website at www.alfalaval.com