Alfa Laval LKH UltraPure

Centrifugal pumps

Introduction

The Alfa Laval LKH UltraPure Centrifugal Pump is designed for use in high-purity applications where high efficiency, exceptional cleanability, contamination safety, robust design and low maintenance are of paramount importance. With verified cleanability, these pumps provide unobstructed product flow, very low NPSH requirements and excellent hydraulic efficiency.

Precision-engineered, the LKH UltraPure pump delivers greater energy efficiency than similar pumps. Its optimized design, premium motor, tight tolerances and advanced impeller design minimize recirculation and reduce energy consumption.

Applications

The Alfa Laval LKH UltraPure pump is designed to meet the stringent demands and regulations of high-purity applications across the biotechnology and pharmaceutical industries which require equipment with the highest material integrity.

All pumps are delivered with a complete Alfa Laval Q-doc package. Q-doc provides easier validation, proof of origin and compliance for inspection according to Good Manufacturing Practice (GMP) and ASME BPE requirements.

The LKH UltraPure pump is available in eight sizes to handle capacities up to 275 m3/h and differential pressures up to 10 bar at 50 Hz.

Benefits

- Energy efficient: superior efficiency resulting in reduced energy consumption and CO2 footprint.
- Maximized uptime and reduced maintenance costs: robust mechanical design and ease of maintenance with modular front-loading seals.
- Low contamination risk: comes with full material traceability and USP Class VI elastomers to reduce risk of process contamination from extractables.
- Smooth qualification, validation and process control: material traceability, and pump supplied with the Alfa Laval Q-doc package in line with Good Documentation Practice (GDP).

Standard design

All media contacting steel components like pump casing, impeller, impeller nut and backplate are in W. 1.4404 (AISI

316L) with material traceability 3.1 according to EN 10204. Product wetted elastomers are specified to USP Class VI, 121°C, Chapter 88 and Chapter 87. A stainless steel shroud protects the motor and four adjustable stainless steel legs support the complete unit.

A compression coupling securely attaches the stub shaft to the motor shaft with precision alignment, and the semi-open impeller with a special vane design ensures efficient and gentle handling of the product as it moves through the pump.

As standard, the LKH UltraPure pump is equipped with a single mechanical shaft seal but is also available with a double mechanical shaft seal. The front-loading shaft seal, with the spring and washers mounted on the atmospheric side, makes maintenance fast, easy and inexpensive. It takes just a few minutes to replace the shaft seal. In addition, the balanced design minimizes the risk of seal opening during unforeseen pressure shock.

TECHNICAL DATA

Materials	
Product wetted steel parts:	W. 1.4404 (316L) with material traceability 3.1 according to EN 10204
Other steel parts:	Stainless steel
Inside surface finish:	Mech Ra ≤ 0.5
External finish:	Fiber brushed
Product wetted elastomers:	EPDM - USP Class VI, 121°C. Chapter 88, and Chapter 87
Rotary seal face:	Silicon Carbide
Stationary seal face:	Silicon Carbide

Motor
Foot-flanged motor according to the IEC metric standard, 2 poles = 3000/3600 rpm at 50/60 Hz, 4 poles = 1500/1800 rpm at 50/60 Hz, IP 55 (with drain hole with labyrinth plug), insulation class F.

Motor sizes	
50Hz:	1.5 - 75 kW
60Hz:	1.2 - 80 kW

Min./max. motor speed	
2 poles: 1.2 - 45 kW:	900 - 4000 rpm
2 poles: 55 - 80 kW:	900 - 3600 rpm
4 poles: 1.6 - 75 kW:	900 - 2200 rpm

Warranty
Extended 3-years warranty on LKH pumps. The warranty covers all non wear parts on the condition that genuine Alfa Laval Spare Parts are used.

OPERATING DATA

Max. inlet pressure	
LKH UltraPure 10 - 70:	500kPa (5 bar)

Temperature	
Temperature range:	-10°C to +140°C (EPDM)
Flush media:	Max. 70°C
Flush housing sterilization (pump not in operation):	Max. 125°C

Double mechanical shaft seal	
Water pressure inlet, LKH UltraPure 10 - 60:	Max. 500 kPa (5 bar)
Water pressure inlet, LKH UltraPure 70:	Max. 300 kPa (3 bar)
Water consumption:	0.25 - 0.5 l./min.

Connections for double mechanical shaft seal	
LKH UltraPure 10 - 70:	1/8" G

Dimensions (mm)

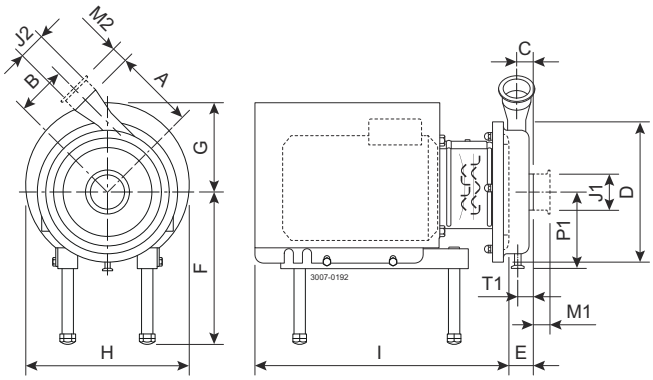

Pump specific measures

Pump Model	LKH UltraPure-10	LKH UltraPure-20	LKH UltraPure-25	LKH UltraPure-35	LKH UltraPure-40	LKH UltraPure-45	LKH UltraPure-60	LKH UltraPure-70
A	142	180	193	193	212	193	261	254
B	87	88	106	119	126	97	102	147
C	23	27	32	23	28	41	62	25
D	247	253	303	303	329	329	329	408
E	51	63	69	54	64	64	106	76
P1	123	129	153	153	166	153	165	206
T1	23	23	24	26	24	28	47	11

Motor specific measures

Motor IEC	IEC90	IEC100	IEC112	IEC132	IEC160	IEC180	IEC200	IEC250
Motor kW	**1.5/2.2**	**3.0**	**4.0**	**5.5/7.5**	**11/15/18.5**	**22**	**30/37**	**55/75**
F(max.)[1]	316	336	339	358	386	406	372	500
G	157	185	198	196	262	286	399	394
H	288	325	359	383	485	533	670	738
I (LKH-10 to LKH-60)	434	516	497	597	791	842	980	-
I (LKH-70)	-	-	-	-	804	855	993	1051

[1] Possible to reduce dimension F by min. 59 mm for all pump models. For smaller models it will be possible to reduce dimension F even further.

Frame overview

Pump Model	LKH UltraPure-10	LKH UltraPure-20	LKH UltraPure-25	LKH UltraPure-35	LKH UltraPure-40	LKH UltraPure-45	LKH UltraPure-60	LKH UltraPure-70
Motor range (IEC)	**IEC90-IEC160**	**IEC90-IEC160**	**IEC90-IEC200**	**IEC90-IEC180**	**IEC90-IEC200**	**IEC100-IEC180**	**IEC112-IEC200**	**IEC160-IEC250**
Motor range (kW)	1.5-11	1.5-18.5	1.5-30	1.5-22	1.5-30	3-22	4-45	11-75

Note! Dimensional data are based on 2 pole, ABB motors.

Drain diameter

	ISO 1127	TC
	Clamp	Clamp
1/2"	13.5	12.7
3/4"	17.2	19

Note! Dimensions are for guidance only. For exact measures of specific pump specifications, please refer to Anytime Configurator.

Connections

Pump Model		LKH UltraPure-10 LKH UltraPure-20 LKH UltraPure-35	LKH UltraPure-25	LKH UltraPure-40	LKH UltraPure-45 LKH UltraPure-70	LKH UltraPure-60
Clamp ISO 1127	M1	36	48	48	92	92
	M2	36	36	36	48	92
Clamp ASME BPE	M1	29	29	29	29	29
	M2	29	29	29	29	29
Clamp ISO 2037	M1	21	21	21	21	21
	M2	21	21	21	21	21
Clamp DIN 32676	M1	64	64	64	92	92
	M2	21	64	21	64	92
Flange Asept. A for DIN	M1	64	96	96	60	60
	M2	47	64	47	96	60
Flange Asept. A for ASME	M1	56	58	58	60	60
	M2	47	56	47	58	60
Union Asept. A for DIN	M1	100	100	100	64	64
	M2	48	100	48	100	64
Union Asept. A for ASME	M1	60	54	54	64	64
	M2	48	60	48	54	64
J1[1]		63.5 / 2.5"	76.1 / 3"	76.1 / 3"	101.6 / 4"	101.6 / 4"
J2[1]		51 / 2"	63.5 / 2.5"	51 / 2"	76.1 / 3"	101.6 / 4"

[1] Other dimensions might be available upon request. ESE00269/9

Flow chart

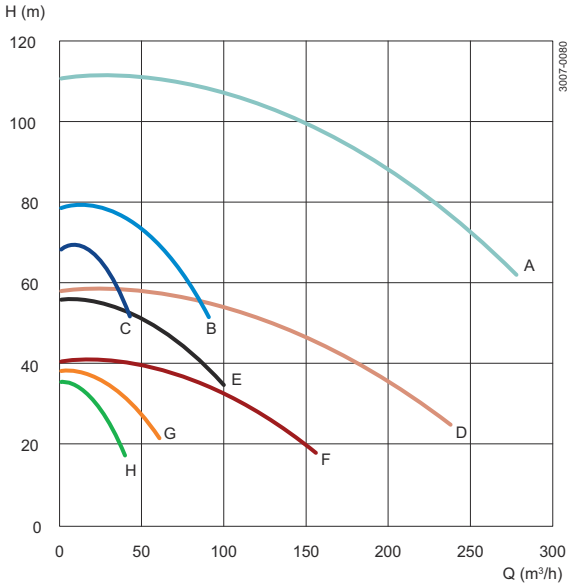

A = LKH UP-70
B = LKH UP-40
C = LKH UP-35
D = LKH UP-60
E = LKH UP-25
F = LKH UP-45
G = LKH UP-20
H = LKH UP-10

Figure 1. Frequency: 50Hz - Speed (synchr): 3000 rpm

Q-doc

Standard documentation package:

- Declaration of compliance with Regulation (EC) No.: 1935/2004.
- Declaration of compliance to EN 10204 type 3.1 (MTR).
- Declaration of compliance to the U.S. Food & Drug Administration CFR 21 (non-metallic parts).
- Declaration of compliance to the U.S. Pharmacopeia (Elastomers and polymers).
- TSE (Transmissible Spongiform Encephalopathy) / ADI (Animal Derivative Ingredient) declaration.
- Declaration of surface finish compliance.
- Declaration of passivation and electro polishing (if specified).
- 3.1 certification in accordance to EN10204.
- Pump performance test certificate.

Optional documentation:

- Hydrostatic test certificate.
- Surface measurement report.
- Delta ferrite report (impeller).

Options

- Impeller with reduced diameter.
- Impeller with delta ferrite max. 1%.
- Motor for other voltage and/or frequency.
- Half speed motor.
- Motor with increased safety/flame proof motor.
- ATEX approved execution (LKHex UltraPure).
- Double mechanical shaft seal.
- Adjustable pads.
- Horizontal drain connection, see illustration below.
- Drain with 1/2" Alfa Laval Unique DVST UltraPure valve welded directly to casing, see illustration below.
- Special flush arrangement with 1/2" Alfa Laval Unique DVST UltraPure diaphragm valve, needle valve and flow meter, see illustration below.
- No drain.
- Product wetted surface finish mechanically polished to Ra ≤ 0.8 µm.
- Product wetted surface finish electropolished to Ra ≤ 0.4 µm.
- Passivated surface.
- Product wetted elastomers FPM or FEP to USP Class VI, 121°C Chapter 88, and Chapter 87.
- Hydrostatic testing with certificate.
- Surface finish measurement with certificate.
- 0°, 90° or 270° outlet, see illustration below.

Available outlet positions

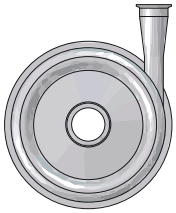

0°

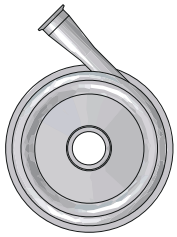

45°

90°

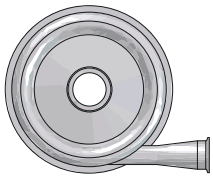

270°

1/2" Alfa Laval Unique DVST UltraPure valve

- Welded directly to casing.
- Inside finish electropolished to Ra ≤ 0.4 µm.
- PTFE diaphragm conforming to USP Class VI.

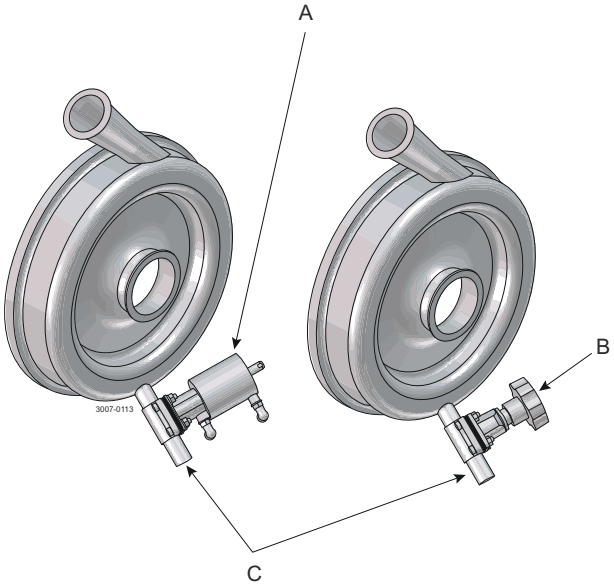

A = Pneumatic actuator.

B = Manual handle.

C = Available tube standards:
- ISO1127.
- DIN11850.
- ASME-BPE.
- ISO2037

Flush arrangement

With the flush kit arrangement some process fluid is passing through the flush housing of the double mechanical seal, creating a barrier from the atmosphere to avoid potential process contamination across the seal face.

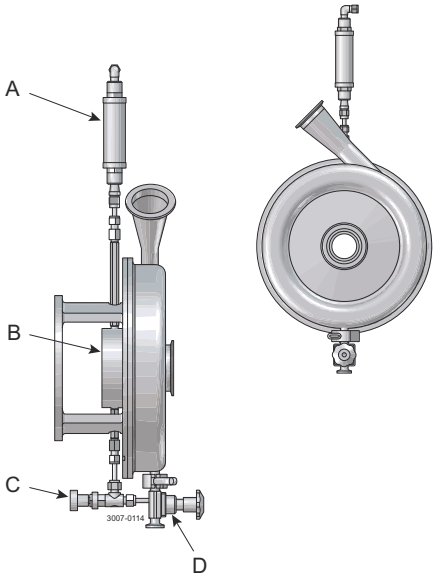

A = Flow meter

B = Flush Housing

C = Flow control needle valve

D = Alfa Laval Unique DVST UltraPure valve

Available drain connections

½" or ¾" vertical drain:
- Tri-clamp for ASME.
- Clamp for ISO 1127.

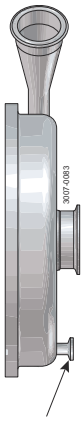

½" or ¾" horizontal drain:
- Tri-clamp for ASME.
- Clamp for ISO 1127.
- Clamp for DIN 11864-3.

Ordering

Please state the following when ordering:
- Pump size.
- Connections.
- Impeller diameter.
- Motor size.
- Voltage and frequency.
- Flow, pressure and temperature.
- Density and viscosity of the product.
- Options.

Authorized Distributor

Note! For further details, see also Instruction manual ESE01703. This product has EHEDG certificate.

This document and its contents are subject to copyrights and other intellectual property rights owned by Alfa Laval Corporate AB. No part of this document may be copied, re-produced or transmitted in any form or by any means, or for any purpose, without Alfa Laval Corporate AB's prior express written permission. Information and services provided in this document are made as a benefit and service to the user, and no representations or warranties are made about the accuracy or suitability of this information and these services for any purpose. All rights are reserved.

200006084-1-EN-GB

© Alfa Laval Corporate AB

How to contact Alfa Laval

Up-to-date Alfa Laval contact details for all countries are always available on our website at www.alfalaval.com